OPERATOR'S MANUAL

Indmar

MARINE ENGINES

California
Proposition 65 Warning

The engine exhaust from this product contains chemicals known to the state of California to cause cancer, birth defects or other reproductive harm.

DISCLAIMERS:

All information, illustrations and specifications in this manual are based on the latest information available at the time of publishing. The illustrations used in this manual are intended as representative reference views only. Products are under a continuous improvement policy. Thus, information, illustrations and/or specifications to explain and/or exemplify a product, service or maintenance improvement may be changed at any time without notice.

ALL RIGHT RESERVED:

No part of this publication may be reproduced or used in any form by any means – graphic, electronic or mechanical, including photocopying, recording, taping or information storage and retrieval systems – without the written permission of Indmar Marine Engines.

California
Proposition 65 Warning

Certain components in this product and its related accessories contain chemicals known to the state of California to cause cancer, birth defects or other reproductive harm.
Wash hands after handling.

DISPOSAL STATEMENT:

Disposal requirements for waste electrical and electronic equipment:

NOTICE

Electrical and electronic equipment can contain harmful substances which can affect the environment and human health.

WEEE symbol (Waste of Electrical and Electronic Equipment): The symbol for the separated disposal of electrical and electronic equipment is a crossed-out waste bin on wheels (Directive 2002/96/EC Waste Electrical and Electronic Equipment).

You must not dispose any electrical and electronic equipment marked with this symbol (battery-operated electrical appliances, measurement equipment, light-bulbs, etc.) in the domestic waste but dispose of these separately. Always use the waste return and collection systems locally available and contribute to the reuse, recycling and all other forms of use for waste electrical and electronic equipment.

WELCOME

Dear Indmar Marine Engine Owner:

Thank you for selecting a boat powered by an Indmar Marine engine. Indmar is proud to provide the power to the best boat companies in the business and we hope that pride shows in the quality of our products. In the unlikely event that you have a defect-related problem with your boat's engine or drive train, you can rest assured knowing it is backed by our industry-leading five-year warranty coverage on premium models.

This is an exciting year for Indmar and for the marine industry. Indmar has joined forces with Ford Motor Company to produce a line of marine engines designed to exceed customer expectations. The 6.2L Ford-based engines are fuel injected and equipped with catalytic converter exhaust systems to provide a cleaner and safer boating experience for you and your family.

If you have any questions concerning your engine that are not covered in this manual, please feel welcome to contact Indmar Customer Service at (901) 353-9930 or visit our website, www.indmar.com, and submit your question.

Thanks again for choosing an Indmar-powered boat. We wish you safe, trouble-free boating.

Sincerely,

Team Indmar

© 2015 Indmar Marine Engines

INDMAR MARINE ENGINES VALUE STATEMENT

Indmar Marine Engines has a pedigree going back 40 years in the inboard marine industry and a proud tradition of pointing the way forward. Today, this legendary brand delivers an inimitable mix of unrivaled performance, meticulous craftsmanship and groundbreaking innovations – charting a course for others to follow, yet leaving the competition behind.

INDMAR MARINE ENGINES COMPANY MISSION

To produce the world's finest, most advanced and most dependable gasoline inboard marine engines at the best possible price, while respecting the needs of our employees, customers, vendors and the precious environment we share.

CONTENTS

Introduction vi
Section 1 – Safety 1-1
Carbon Monoxide Gas 1-2
Fuel 1-3
Battery 1-4
Engine Oil 1-5
Cleaning Solvents 1-5
Entanglement 1-5
Environmental 1-5
Section 2 – General Information 2-1
Using Oxygenated Fuels or Fuels with Alcohol 2-1
Fuels in Other Countries 2-2
Fuel System 2-2
Battery 2-2
“Service Required” or “Check Engine” Indicator 2-3
Check Transmission Light 2-4
Engine Cooling 2-4
Exhaust Hoses 2-6
Selecting a Propeller 2-6
Section 3 – Pre-Start Checks 3-1
Pre-Start Checks 3-1

© 2015 Indmar Marine Engines

Section 4 – First Time Operation and Break-In 4-1
First Time Operation 4-1
Break-In 4-3
Section 5 – Engine Starting Procedures 5-1
How to Start Your Engine 5-1
If Engine Does Not Start 5-3
How to Clear the Engine 5-3
Engine Restart 5-4
Section 6 – Normal Operation 6-1
Sensible Operation 6-1
Daily Routine 6-1
Operating the Controls 6-2
Unusual Vibration 6-3
Section 7 – Maintenance 7-1
General Service Notes 7-1
Engine Oil 7-4
Engine Flame Arrestor 7-8
Engine Cooling 7-8
Internal (Cooling System) Care 7-11
Fresh Water Cooling 7-11
Fuel System 7-13
Transmissions 7-13
Electrical System 7-19
Wiring 7-20

Section 8 – Storage and Winter Lay-Up 8-1
General Preparation 8-2
Reactivating Engine After Extended Storage 8-9
Extended Storage 8-11
Section 9 – Troubleshooting 9-1
Appendix A – Maintenance Components and Fluids A-1
Service Log A-2
Appendix B – Engine Specifications B-1
Appendix C – Indmar Limited Product Warranty C-1

© 2015 Indmar Marine Engines

INTRODUCTION

This manual will acquaint you with basic information needed to safely operate and maintain your Indmar engine. We suggest you and all other operators read the entire manual before using your boat.

We recommend you contact your Indmar dealer for all engine service. Certified Indmar Technicians are trained to service your Indmar engine and drive train. They have current specifications, parts and the special equipment needed to service your Indmar engine and drive train. To find your nearest Indmar dealer, please visit our website at www.indmar.com or call (901) 353-9930.

To ensure that the proper information is available, note the six digit engine serial number. The serial number is stamped on the engine block. Refer to Figure 1.1 for locations. The serial number also appears on the emissions label on the valve cover of the engine and on several stick-on tags that are attached to major engine components.

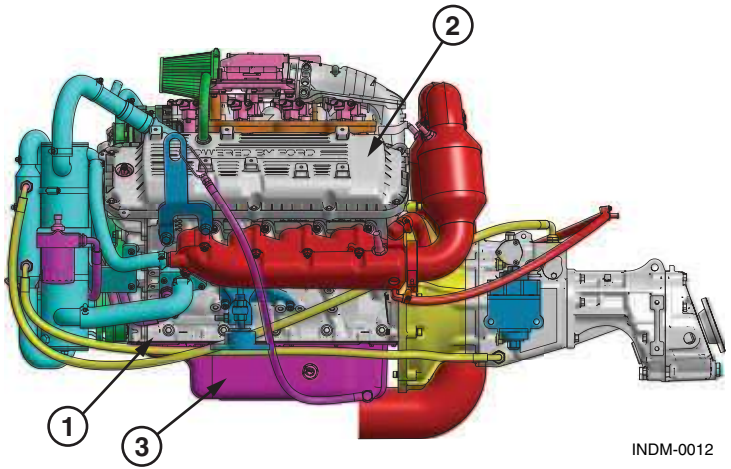

1 - Engine Block
2 - Valve Cover
3 - Oil Pan

Figure 1.1 – Serial Number Locations

WARRANTY REGISTRATION

The Federal Boat Safety Act of 1971 requires registrations of marine products sold in the United States be maintained by the manufacturer and dealers of those products. Your dealer should have completed your warranty registration to comply with federal regulations. This registration enables us to contact you, if it should become necessary, to change or improve your product. The engine serial number is stamped into the block. For additional serial number locations, refer to Figure 1.1. Always retain a copy of the serial number for your personal records.

Warranty registration must be received within 10 days after date of purchase by the first owner. If your engine is not registered, all warranties will be void.

© 2015 Indmar Marine Engines

WARRANTY REGISTRATION TRANSFER

The remainder of the engine warranty is transferable to a second or subsequent owner. Warranty transfers must be completed within 10 days of the transfer of ownership.

If the trade-in and resale is handled by an authorized Indmar dealer, the dealer must fill out the warranty registration transfer form and send it and other paperwork specified along with the warranty transfer fee and the transfer will be processed on approval by Indmar.

If the sale of the boat is from a private owner to another individual, the engine package must be inspected, at the seller or purchaser's expense, and the Inspection Form, Warranty Transfer Form, specified paperwork and transfer fee and the transfer will be processed on approval by Indmar.

The new boat owner will be notified within 10 days of Indmar's receipt of the transfer form whether the transfer has been accepted or not. If the transfer has been accepted, the warranty expiration date will also be provided for the new owner.

To obtain enjoyment from your boat, follow recommendations described in this manual. The knowledge you gain through careful review will help you experience lasting satisfaction.

Further information regarding the care, operation, required equipment or specifications for your boat can be obtained from your local US Coast Guard Auxiliary, US Power Squadron, state boating authorities, or the American Red Cross. Know the law and your responsibilities as a boat owner.

Any alteration, change, improper maintenance or abnormal use by you which renders the engine or any of its components unreasonably dangerous will void all warranties and Indmar will not be liable for the resulting damages or injuries.

EMISSION CONTROL WARRANTY INFORMATION

The inboard engine in your boat includes the Indmar Emission Control System identified as MFI. The fuel and ignition systems on your engine meet the stringent requirements set forth by the U.S. Environmental Protection Agency (EPA) and the California Air Resources Board (CARB). Indmar also uses propylene glycol anti-freeze in the closed cooling system of your engine to reduce the environmental impact in the event that anti-freeze is expelled from the engine.

Your Indmar manufactured engine has a special environmental label required by the California Air Resources Board (CARB). The label has 1, 2, 3 or 4 stars. A hangtag, provided with your inboard engine, describes the meaning of the star system.

One Star-Low emission
The one-star label identifies engines that meet the Air Resources Board's Personal Watercratf and Outboard marine engine 2001 exhaust emission standards. Engines meeting these standards have 75% lower emissions than conventionnal carbureted two-stroke engines. These engines are equivalent to the U.S. EPA's 2006 standstards for marine engines.

Two Stars-Very Low emission
The two-star label identifies engines that meet the Air Resources Board's Personal Watercraft and Outboard marine engine 2004 exhaust emission standards. Engines meeting these standards have 20% lower emissions than One Star-Low Emission engines.

Three Stars-Ultra Low emission
The three-star label identifies engines that meet the Air Resources Board's Personal Watercraft and Outboard marine engine 2008 exhaust emission standards or the Sterndrive and Inboard marine engine 2003-2008 exhaust emission standards.. Engines meeting these standards have 65% lower emissions than One Star-Low Emission Engines.

Four Stars-Super Ultra Low emission
The four-star label identifies engines that meet the Air ressources Board's Sterndrive and Inboard marine engine 2009 exhaust emission standards. Personal Watercraft and Outboard marine engines may also comply with these standards. Engines meeting these standards have 90% lower emissions than One Star-Low Emission Engines.

Cleaner Watercraft - Get the Facts
1-800-END-SMOG • www.arb.ca.gov

The Star Label means Cleaner Marine Engines
This engine has been certified as:

The Symbol for Cleaner Marine Engines:

Cleaner Air and Water
For a healthier lifestyle and environment.

Better Fuel Economy
Burns up to 30-40 percent less gas and oil than conventional carbureted two-stroke engines, saving money and ressources.

Longer Emission Warranty
Protects consumer for worry free operation.

OPERATING FUELS AND LUBRICANTS

In order to keep your engine operating efficiently and to maintain the Emission Control System the following requirements must be observed.

Fuel – Your engine was designed and certified to operate on the unleaded fuels listed below. Fuel ratings must be based on the (R+M)/2 method and meet the specifications ASTM D4814 in the US. These fuels need no additives for proper operation.

6.2L Indmar Standard and Premium Engines	89 Octane
6.2L Supercharged Indmar Engines	93 Octane

© 2015 Indmar Marine Engines

Lubricant:

Standard and Premium Models – Semi-synthetic 5W-30 oil meeting the API rating of SN

Supercharged Models – Fully synthetic 15W-50 oil meeting the API rating of SN

Additives – The only additive that is recommended by Indmar for use in your engine is Indmar Fuel Treatment. This additive helps preserve the fuel in your tank and in the engine's fuel system. We recommend the use of Indmar Fuel Treatment during off-season storage and for the boater that consumes less than a full tank of fuel every two weeks. Refer to Section 2, General Information, for more information.

EPA EMISSION-RELATED WARRANTY REQUIREMENTS

Your new engine is designed, built and equipped so it conforms at the time of sale to the ultimate purchaser with the requirements of CFR 40, part 1045.120. It is free from defects in materials and workmanship that may keep it from meeting these requirements.

The minimum emission-related warranty period is 3 years/480 hours, whichever comes first. The emission-related warranty covers all components whose failure would increase an engine's emissions of any regulated pollutant, including components listed in the following section and components from any other system developed to control emissions.

EMISSIONS COMPONENTS WARRANTY

The following components are considered as part of the emissions control system and are covered under the Emissions Control Warranty.

1. Fuel Metering System
   A. Fuel injectors
   B. Fuel pressure regulator
   C. Manifold Absolute Pressure Sensor
   D. Throttle Position Sensor
   E. Idle Air Control Valve
   F. Throttle Body – Port Fuel Injection Models
   G. Throttle Body Assembly – Throttle Body Fuel Injection Models
   H. Coolant Temperature Sensor
   I. Intake Valves
   J. Oxygen Sensors
2. Air Induction System
   A. Intake Manifold
   B. Air Filter (Flame Arrestor)
3. Ignition System
   A. Spark Plugs
   B. Electronic Ignition System
   C. Ignition coil and/or control module
   D. Ignition Wires
4. Lubrication System
   A. Oil pump and internal parts

5. Positive Crankcase Ventilation (PCV) System
   A. PCV valve
   B. Oil Filler Cap
6. Exhaust System
   A. Exhaust manifold(s)
   B. Exhaust riser(s)
   C. Exhaust valves
   D. Catalytic Converters
7. Miscellaneous Items Used on Above Systems
   A. Hoses, clamps, fittings, tubing, sealing gaskets or devices and mounting hardware
   B. Electronic Controls
   C. Electronic Control Module
   D. Pulleys, belts and idlers

NOTICE

The repair or replacement of any warranted part otherwise eligible for warranty coverage under the Emission Control Warranty may be excluded from such warranty coverage if Indmar demonstrates that the engine has been abused, neglected, or improperly maintained and that such abuse neglect or improper maintenance was the direct cause of the need for repair or replacement of the part.

The emission warranty covers damage to other engine components that is caused by the failure of a warranted part.

This manual contains written instructions for the proper maintenance and use of your inboard engine. All emission warranty parts are warranted by Indmar for the entire warranty period of the engine.

Emission warranted parts that are scheduled for regular inspection, but not regular replacement, are warranted by Indmar for the entire warranty period of the inboard engine.

Any emission warranty part repaired or replaced under the terms of this warranty statement is warranted by Indmar for the remainder of the warranty period of the original part. All parts replaced under this limited warranty become the property of Indmar.

If the ownership of a product is transferred during Emission Components Warranty period, this warranty shall also be transferred and be valid for the remaining coverage period provided that Indmar is notified in the following way:

a. The former owner contacts Indmar and provides us with the required information listed below; or

© 2015 Indmar Marine Engines

b. Indmar receives a proof that the former owner agreed to the transfer of ownership and we are provided with the information listed below.

- Current owner's name, address, telephone, engine serial number and date of purchase
- New owner's name, address, telephone, engine serial number and date of transfer

Send the above information to:

Indmar Products
5400 Old Millington Rd
Millington, TN 38053
Attn: Emission Warranty Transfer

NOTICE

The above procedure is valid for the transfer of the Emission Components warranty only. Refer to the Limited Warranty in Appendix C of this manual for information regarding warranty transfer of the remaining engine components.

EMISSION MAINTENANCE REQUIREMENTS

The following component maintenance is required to maintain the Emission Control System of your engine. Refer to Section 7, Maintenance, for procedures.

- Engine oil and filter: Change oil and filter after the first 10 hours then every 50 hours or annually, whichever occurs first.
- Flame Arrestor: Clean every 100 hours. Replace as necessary.
- Spark Plugs: Inspect/clean every 300 hours.
- Fuel Injectors: Clean every 300 hours or annually, whichever occurs first.
- Spark Plug Wires: Inspect annually. Replace as necessary.

NOTICE

Ignition timing, engine idle speed and air-fuel mixture are not adjustable on this engine. NO OTHER ADJUSTMENTS NEEDED.

CALIFORNIA EMISSION CONTROL WARRANTY STATEMENT YOUR WARRANTY RIGHTS AND OBLIGATIONS

The California Air Resources Board and Indmar Products are pleased to explain the emission control system warranty on your inboard engine. In California, new inboard engines must be designed, built and equipped to meet the State's stringent anti-smog standards.

Indmar Products must warrant the emission control system in your inboard engine for the time listed below provided there has been no abuse, neglect or improper maintenance of your inboard engine.

Your emission control system may include parts such as the fuel injection system, the ignition system, and catalytic converter. Also included may be hoses, belts, connectors and other emission-related assemblies.

Where a warrantable condition exists, Indmar Products will repair your inboard engine at no cost to you, including diagnosis, parts and labor.

Manufacturer's Warranty Coverage

Select emission control parts are warranted for 3 years.

Owner's Warranty Responsibilities

As the inboard engine owner, you are responsible for the performance of the required maintenance listed in your owner's manual. Indmar Products recommends that you retain all receipts covering maintenance on your inboard engine, but Indmar Products cannot deny warranty solely for the lack of receipts or your failure to ensure the performance of all scheduled maintenance.

As the inboard engine owner, you should be aware that Indmar Products may deny you warranty coverage if your inboard engine or part has failed due to abuse, neglect, improper maintenance or unapproved modifications. The most common failures we see are due to unstable or old fuel and lack of proper lubrication. Failures that are attributed to old/unstable fuel or lack of lubrication are not warrantable.

© 2015 Indmar Marine Engines

If your engine is operated in salt or brackish water, special precautions, such as flushing the engine internally and externally, are important. Refer to Section 7, “Salt and Hard Water Operation.” Failures due to corrosion are not covered by the Indmar Limited Warranty.

You are responsible for presenting your inboard engine to an Indmar Products service center as soon as a problem exists. The warranty repairs should be completed in a reasonable amount of time, generally within 30 days.

If you have any questions regarding your warranty rights and responsibilities, you should contact Indmar Customer Service at www.indmar.com or 1-901-353-9930.

Section One
SAFETY

The words DANGER, WARNING, CAUTION and NOTICE are used throughout this manual to highlight important information. Be certain that the meanings of these alerts are known to all who work on or near the equipment.

Follow the safety information throughout this manual in addition to the safety policies and procedures of your employer.

This safety alert symbol appears with most safety statements. It means attention, become alert, your safety is involved! Please read and abide by the message that follows the safety alert symbol.

DANGER

Indicates a hazardous situation which, if not avoided, will result in death or serious injury.

WARNING

Indicates a hazardous situation which, if not avoided, could result in death or serious injury.

CAUTION

Indicates a hazardous situation which, if not avoided, could result in minor or moderate injury.

NOTICE

Indicates a situation which can cause damage to the engine, personal property and/or the environment, or cause the equipment to operate improperly.

NOTE: *Indicates a procedure, practice or condition that should be followed in order for the engine or component to function in the manner intended.*

© 2015 Indmar Marine Engines

CARBON MONOXIDE GAS

⚠ DANGER

Carbon monoxide gas (CO) is colorless, odorless and extremely dangerous. All engines and fuel burning appliances produce CO as exhaust. Direct and prolonged exposure to CO will cause BRAIN DAMAGE or DEATH. Signs of exposure to CO include nausea, dizziness and drowsiness. Ensure adequate ventilation to prevent accumulation of CO in the boat.

Each year, boaters are injured or killed by carbon monoxide. Virtually all of these injuries and deaths are preventable. Carbon monoxide is a potentially deadly gas produced anytime a carbon-based fuel, such as gasoline, burns. Carbon monoxide sources on your boat include gasoline engines and generators, cooking ranges, space heaters and water heaters.

Do not confuse carbon monoxide poisoning with seasickness, intoxication or heat stress. If someone complains of irritated eyes, headache, nausea, weakness, dizziness or drowsiness, or you suspect carbon monoxide poisoning, immediately move the person to fresh air, investigate the cause and take corrective action. Seek medical attention if necessary.

Indmar engines are equipped with catalytic converters which significantly reduce harmful CO emissions, but it is important that all of the DO's and DON'Ts still be followed.

Please follow these **DOs** and **DON'Ts** to ensure a safe boating experience every time.

DON'T swim or sit near the swim platform when any engine is running.

DON'T hold on to the swim platform while the boat is underway (no "Teak Surfing").

DON'T moor next to another boat whose engine is running.

DON'T confuse carbon monoxide poisoning with seasickness or intoxication.

DO immediately move the person to fresh air, investigate the cause and take corrective action if someone on board complains of irritated eyes, headache, nausea, weakness or dizziness. Seek medical attention if necessary.

DO make sure generators are properly ventilated and keep engine and generator exhausts clear.

DO always shut off engine and generator when moored, anchored or standing still.

DO be aware that the station wagon effect, or backdrafting, can cause carbon monoxide to accumulate inside the cabin, cockpit and bilge when the boat is underway, moving at slow speed or idling.

DO keep your boat's engine well-maintained and regularly check to make sure carbon monoxide detectors in the cabin are working properly.

DO always wear a properly fitted life jacket while in or around water.

For more information on carbon monoxide and boats, contact the US Coast Guard Office of Boating Safety at 1-800-368-5647 or www.uscgboating.org or your state boating law administrator at 1-800-225-9487 or www.nasbla.org.

FUEL

⚠ DANGER

Gasoline is extremely flammable and highly explosive under certain conditions. Explosive gasoline fumes may accumulate in the engine compartment. Failure to properly ventilate fumes with the bilge blower may result in explosive atmosphere.

Indmar marine engines use gasoline for fuel. The area under the engine and around the gasoline tank and supply lines is not open to outside air. Ventilation around these areas must be provided by your bilge blower system and air vents located around the boat. We recommend taking time out to carefully inspect your boat at least once a day for gasoline fumes, oil leaks, and areas where wiring may be worn or damaged.

© 2015 Indmar Marine Engines

⚠ WARNING

Always operate the bilge blower at least 4 minutes prior to starting the engine. Raise the engine cover to ventilate fumes. Inspect the engine and compartment for any fluid or fuel leaks.

- Do not smoke or allow open flames or sparks nearby when refueling.
- Always stop the engine before refueling.
- Maintain contact between the fuel nozzle and the fuel tank or container to prevent electrostatic spark. Do not use a plastic funnel.
- Do not block fuel vents.
- Do not store fuel in any containers or compartments which are not designated for fuel storage and do not use these storage areas for any other purpose.

BATTERY

⚠ DANGER

Explosive battery fumes may accumulate in the engine compartment. While the engine is running or the battery is charging, hydrogen gas is being produced by a lead acid battery and can be easily ignited. Failure to properly ventilate fumes with the bilge blower may result in explosive atmosphere.

- Wear personal protective equipment when working on or around batteries.
- Do not smoke or bring a flame near a battery.
- Do not check for a dead battery by placing a metal object between the battery posts. Sparks could cause an explosion.
- Do not place your head directly above a battery when making or breaking electrical connections.

ENGINE OIL

⚠ WARNING

Wear protective equipment and use caution when checking and changing the engine oil. Engine oil may be hot.

- Prolonged and repeated contact with used engine oil may cause skin cancer.
- Avoid direct skin contact with used engine oil. If skin contact is made, wash thoroughly with soap or hand cleaner as soon as possible.
- Keep used engine oil out of the reach of children.
- Used engine oil is a hazardous material. Dispose of properly.

CLEANING SOLVENTS

⚠ WARNING

Always read and comply with the solvent manufacturer's recommendations for proper use and handling of solvents.

- Do not use gasoline, paint thinners or other highly volatile fluids for cleaning.
- Do not mix cleaning agents together; harmful vapors may be release.

ENTANGLEMENT

⚠ WARNING

Rotating or moving parts can entangle or sever body parts.

- Do not wear jewelry, unbuttoned cuffs, ties or loose-fitting clothing.
- Tie long hair back when working near moving or rotating parts.
- Keep hands, feet and tools away from all moving parts.

ENVIRONMENTAL

NOTICE

Always be environmental responsible. Follow the guidelines of the EPA or other governmental agencies for the proper disposal of hazardous materials such as engine oil and fuel. Consult the local authorities or reclamation facility.

© 2015 Indmar Marine Engines

NOTES

Section Two
GENERAL INFORMATION

Before operating or maintaining the engine, review "Safety" on page 1-1.

WARNING! Fuel is extremely flammable and explosive under certain conditions. When refueling, stop the engine, make sure to open the motor box and run the blower during and after the re-fueling operation.

Fuels containing alcohol will suffer from a condition called "phase separation" over time. The condition also occurs when water is introduced to the fuel. This phase separated fuel will result in a layer of alcohol or alcohol water mixture at the bottom of the fuel tank that will cause misfires and severe damage to your engine. Damages caused by old or phase separated fuel are not covered by Indmar's Limited Warranty.

To avoid this issue, buy fuel in small quantities so it gets used up instead of sitting in the tank for more than two weeks. Be diligent about preventing water from contaminating the fuel. Use Indmar Fuel Treatment every time you add fuel. If the fuel has experienced phase separation, the tank must be drained and the fuel disposed of.

USING OXYGENATED FUELS OR FUELS WITH ALCOHOL

Ethyl alcohol, ethanol or grain alcohol is acceptable as long as it is a blend and the blended fuel contains no more than 10% ethanol.

NOTICE

Fuels that are blended to contain more than 10% ethanol should not be used in Indmar engines. Fuels that contain more than 10% ethanol will damage your engine. Damages caused by the use of fuels that contain more than 10% ethanol are not covered by your warranty.

NOTICE

Fuels that are blended to contain methanol or wood alcohol should not be used in Indmar engines. These fuels can corrode metal parts in your fuel system and engine. Fuels that contain methanol will damage your engine. Damage caused by the use of fuels that contain methanol is not covered by your warranty.

© 2015 Indmar Marine Engines

FUELS IN OTHER COUNTRIES

If you operate your Indmar engine outside the USA or Canada, unleaded fuels may be difficult to obtain. Leaded fuels must not be used in engines with catalytic converters or serious damage will occur.

FUEL SYSTEM

⚠ WARNING

Never remove or modify any components of the engine's fuel system. Tampering with fuel components may cause a hazardous condition that could result in severe personal injury or death. This work must be performed by your Indmar dealer's technicians.

⚠ WARNING

Do not attempt to repair or replace any components of the fuel system. They are special marine parts and may require special service tools. You could damage the fuel system by not using specified tools. This could cause a fire or explosion.

The Indmar fuel system uses high quality marine grade components. These components will tolerate small amounts of water without sustaining damage. Your engine will misfire and run poorly, however, if water is in the fuel. Use caution when re-fueling not to allow water to enter the fuel system. If you suspect your fuel is water contaminated, consult your dealer and avoid that fuel source in the future.

See your dealer for assistance with fuel system repairs.

BATTERY

Your engine uses a special 12-volt marine battery. If a replacement is needed, use only a marine battery with minimum 650 cold cranking amps at 0°F (-18°C).

NOTICE

Use caution when connecting the battery cables. Improperly connecting the battery cables or using the wrong battery type can damage electrical components. These damages are not covered by your warranty.

When disconnecting or reconnecting battery cables, always disconnect the negative (black) battery cable first. When connecting battery cables, always connect the positive (red) battery cable first.

Before disconnecting the battery, make sure the battery switch (if equipped), ignition key and all accessories are in the OFF position.

Be sure to connect cables properly:

- Black cable to the negative or (-) post
- Red cable to the positive or (+) post

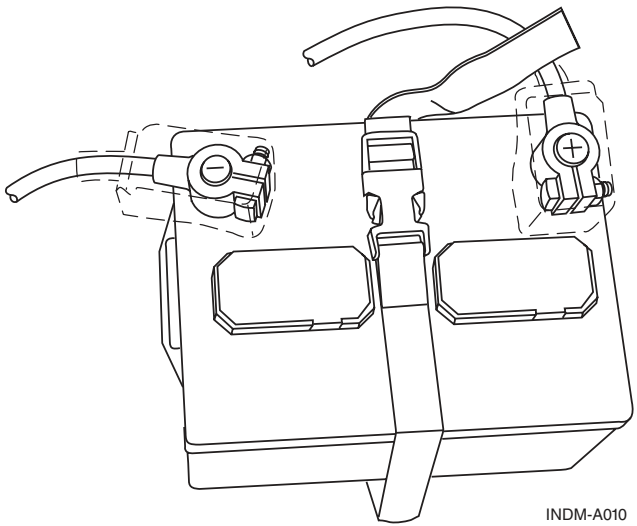

Figure 2.1 – Typical Marine Battery

"SERVICE REQUIRED" OR "CHECK ENGINE" INDICATOR

Some boats are equipped with a digital dash which displays the words **"SERVICE REQUIRED"** and/or **"CHECK ENGINE,"** and some boats are equipped with a Check Engine light. This alerts you when the ECM (Engine Control Module) detects a possible engine problem. If the indicator goes on, return to dealer for service.

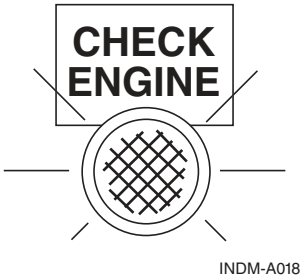

Figure 2.2 – Typical Check Engine Light

© 2015 Indmar Marine Engines

If any of the following conditions is noted:

- Low Oil Pressure
- High Coolant Temperature
- High Transmission Oil Temperature
- Excessive Catalytic Converter Temperature
- Severe Engine Misfire

Engines may enter a Power Reduction mode. Power reduction limits the engine throttle opening to a “safe maneuvering” speed. This mode is intended to allow the driver to get out of harm’s way and to reach safe harbor for engine service.

If the check engine indicator should go on, or if the engine enters the Power Reduction mode, you should have your dealer check the engine as soon as possible.

NOTICE

Schedule engine service at once when this light is illuminated. Failure to have your engine serviced when a check engine light signal is given, may cause damage to your engine or your emissions system.

Follow the boat manufacturer’s instructions if the sea strainer is blocked.

CHECK TRANSMISSION LIGHT

If the engine is equipped with the Walters V-Drive transmission, there may also be a Check Transmission light. If low oil pressure is sensed in the V-Drive, the light will go on indicating the problem. Under normal operation, the light will stay lit at idle and slow speed operation until enough pressure is produced (1200 RPM ± 400 RPM).

Extended cruising or trolling at low RPM is not harmful, even if the light is lit, provided that the V-Drive oil level is sufficient. If the oil level is normal and the light stays lit above 2000 RPM, take the boat to your Indmar dealer for service.

ENGINE COOLING

NOTICE: Running engine without adequate cooling can cause engine to overheat and may result in fire and/or explosion. Engines have two water pumps. One circulates coolant throughout the engine. The other pump uses water from the sea, lake or river to feed raw water to the engine. This raw water pump is designed to use the water it pumps to lubricate its impeller. Do not

run the engine unless the boat is in water. If you run the engine with the boat out of the water, the water pump may be damaged, causing your engine to overheat or start a fire. This will void the warranty.

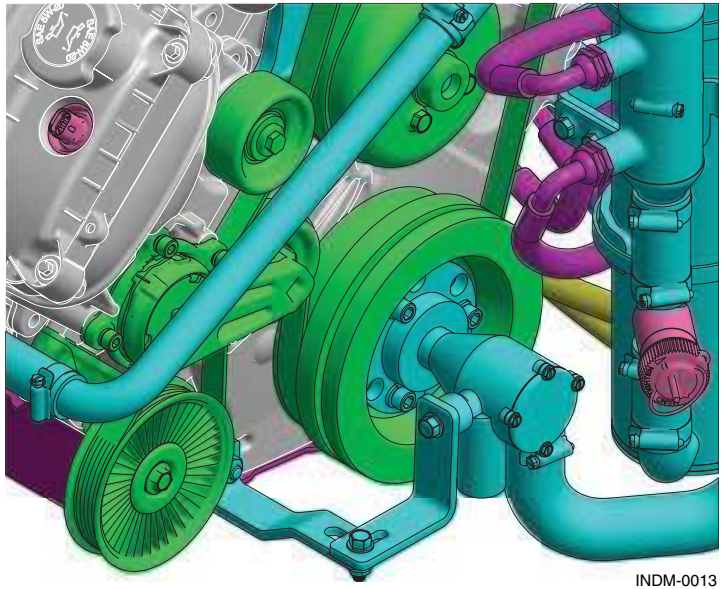

Figure 2.3 – Raw Water Pump

NOTICE

The rubber water pump impeller in the water pump can be damaged from running dry or by picking up sand or silt through the water intake. Inspect your water pump impeller annually or more often if you operate your boat in shallow water or run it aground. Impeller failure will result in an overheated engine.

NOTICE

Running your engine with your boat out of water will damage or ruin your engine. Damage to your engine caused by overheating is not covered by your warranty.

NOTICE

Running the engine during the RPM reduction phase may cause severe damage to your engine.

- Monitor the temperature and oil gauges continuously.
- If the temperature rises past 210° F (99° C) or your oil pressure drops below 10 psi (69 kPa), severe engine damage may result.

Damage due to running the engine with excessive temperature or low oil pressure is not covered by your warranty.

© 2015 Indmar Marine Engines

NOTICE

Your Indmar Marine Engine is cooled by pumping water from the body of water that the engine is being operated in through the heat exchanger. Freezing temperatures will severely damage the cooling system components and exhaust system components. Contact your dealer or refer to Section 8, Storage and Winter Lay-Up for draining instructions.

EXHAUST HOSES

DANGER! Carbon monoxide gas (CO) is colorless, odorless and extremely dangerous. Exhaust hoses on most boats carry exhaust gases from the engine outside of the boat. These hoses carry water that has been used to cool the engine. This water keeps the hoses cool and prevents them from melting.

Monitor the engine temperature gauge frequently. If your engine overheats, carefully inspect the exhaust hoses for damage. Damaged hoses can allow carbon monoxide gas to enter your boat.

SELECTING A PROPELLER

For best engine performance and longevity, the wide-open-throttle (WOT) engine operation must be near the top of, but within, the specified WOT operating range. To adjust the WOT operating range, you must select a propeller (propping) with the proper diameter and pitch. The propeller which was supplied with your boat was chosen by the boat builder for best all-around performance under average conditions.

Load, weather, altitude and boat condition all affect WOT engine operation. If you use your boat for several different applications such as wakeboarding, barefooting and cruising, it may be necessary to have 2 or more propellers which will allow the engine to operate in the WOT range for each application.

Propping the boat should be done after engine break-in and the initial 10 hour dealer check. The boat should be loaded the way it would normally be for each application. For instance, if you are propping for wakeboarding, fill the ballast tanks if equipped and add all the people and gear you would normally expect to carry in the boat. Take the boat out and after warm-up, run it at wide-open-throttle and note the maximum RPM. Your Indmar engine is equipped with RPM limiters to prevent over-revving.

If the WOT RPM is higher than the maximum RPM in your engine's WOT operating range, the boat is under-propped. Install a higher pitched propeller to reduce WOT RPMs. An engine that is over-revving may quickly experience catastrophic damage.

If the WOT RPM is lower than the minimum RPM in your engine's WOT operating range, the boat is over-propped. Install a lower pitched propeller to increase WOT RPMs.

An engine that is under-revving is lugging. Lugging places tremendous loads on the pistons, crankshaft and bearings and can cause detonation, piston seizure and other engine damage. This will not be covered under warranty.

Elevation and weather also have a very noticeable effect on the wide-open-throttle power of an engine. Since air (containing oxygen) gets thinner as elevation increases, the engine begins to starve for air. Humidity, barometric pressure and temperature have a noticeable effect on the density of air since heat and humidity thin the air. This phenomenon can become particularly apparent when an engine is propped out on a cool dry day in spring and later, on a hot, humid day in summer, does not have the same performance.

Although some performance can be regained by dropping to a lower pitch propeller, the basic condition still exists. The propeller is too large in diameter for the reduced power output. An experienced marine dealer can determine how much diameter to remove from a lower-pitch propeller for specific high-elevation locations.

Indmar suggests that if you do require a different propeller, consult the dealer you bought the boat from. The dealer is best equipped to help with the selection of the correct propeller for your application(s).

© 2015 Indmar Marine Engines

NOTES

Section Three
PRE-START CHECKS

Before operating or maintaining the engine, review “Safety” on page 1-1.

PRE-START CHECKS

Perform the pre-start checks before each time you operate the engine. If you have questions about any of these procedures, see your Indmar dealer for assistance.

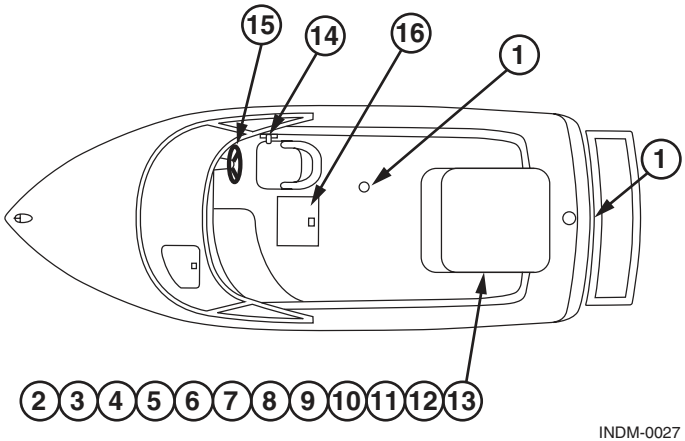

Figure 3.1 – Pre-Start Check Points

1. Check the boat hull and/or garboard drain plug. Make sure they are installed and secure.
2. Carefully inspect engine compartment for signs of fluid leakage and proper ventilation. Unlike autos, marine engine compartments require positive ventilation and air re-circulation to ensure that flammable and explosive vapors are safely dispersed in an environmentally sound manner.
3. Make sure all engine drain plugs are installed. Refer to Section 8, Storage and Winter Lay-Up. There are several drain locations:

   Block – The 6.2L engine block is cooled by anti-freeze coolant. Coolant is drained from the block only when the required coolant change interval is reached.

   Exhaust – The drain hose must be connected.

   Transmission – The transmission oil cooler has drain plugs. Refer to Section 7, Maintenance for specific instructions.

© 2015 Indmar Marine Engines

Fresh Water Cooling System – The heat exchanger has a single drainage point that can be accessed by removing the anode. Refer to Section 8, Storage and Winter Lay-up.

4. Check engine oil level with the dipstick.

Figure 3.2 – Engine Dipstick Level

5. **WARNING! Frequently inspect fuel lines and connections for leaks or deterioration.** Verify fuel lines are tight and there is no leakage present.
6. Inspect oil lines and oil filter. Ensure they are tight and no leakage is present.

Figure 3.3 – Engine Oil Cartridge Filter

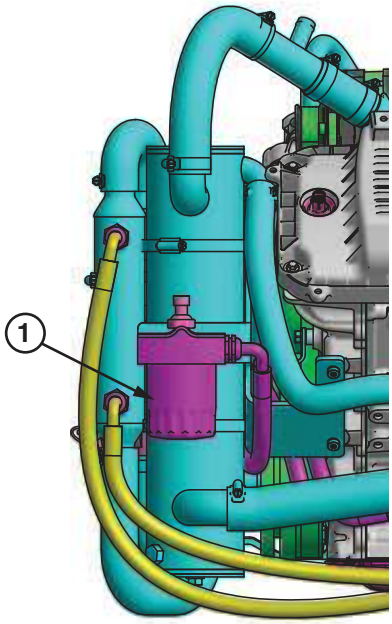

INDM-0021a

1 - Spin-On Filter

Figure 3.4 – Engine Oil Filter

7. Check transmission fluid level. Check V-Drive fluid level if equipped.
8. Your engine is equipped with a fresh water cooling system. Check coolant level in the expansion tank.
9. Check alternator belt for wear and proper tension.
10. Verify that exhaust hoses are in good condition and clamped tight.
11. Ensure that the propeller shaft coupler bolts are tight.
12. Verify engine mounts are tight.
13. Check electrical connections and ensure connectors are tight. Check wiring for signs of wear and abrasion.
14. Verify throttle/shift control is functional and properly adjusted.
15. Verify steering controls are functional and properly adjusted.
16. Verify battery connections are clean and securely fastened. Make sure the battery is fully charged.

© 2015 Indmar Marine Engines

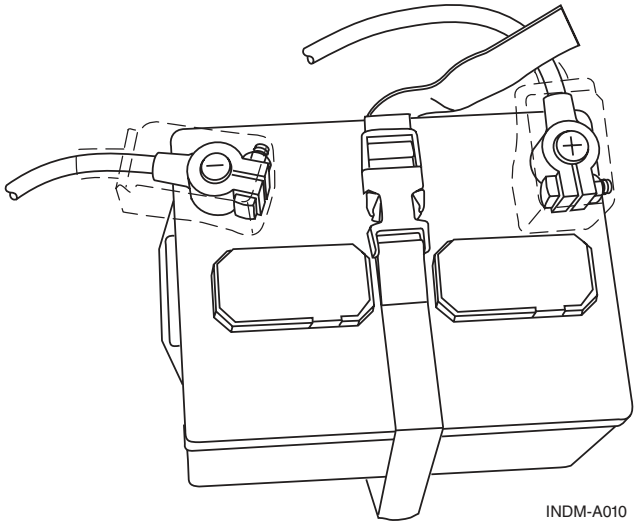

Figure 3.5 – Battery Connections

17. Check the boat's owner's manual for additional pre-operation checks.

Section Four
FIRST TIME OPERATION AND BREAK-IN

Before operating or maintaining the engine, review "Safety" on page 1-1.

⚠ WARNING

Always operate the bilge blower at least 4 minutes prior to starting the engine. Raise the engine cover to ventilate fumes. Inspect the engine and compartment for any fluid or fuel leaks.

NOTICE

A new engine may use a more than normal amount of engine oil before it is broken in. Check your oil level hourly during the break-in period. Once the engine is broken in, check the oil level before each day's use and more often during sustained periods of high RPM or heavily loaded operation. Marine usage is different from automobile usage and oil consumption is EXPECTED. Do not be alarmed if you have to add oil between oil changes.

FIRST TIME OPERATION

1. Perform the Pre-Start Checks. Refer to *"Section 3."*
2. Back the trailer into the water. *NOTICE: Make sure the engine water intakes are not blocked by the trailer bunk and the water intake is submerged.*

NOTICE

Priming the fuel system is required before starting your engine for the first time. This allows the electric fuel pump to fill the fuel injection lines with gasoline. Each time you advance the ignition switch to the "ON" position, the fuel pump cycles for 2 seconds.

3. This procedure is only necessary for the first time the engine is started or in the event the fuel tank is run dry. Prime the fuel system by cycling the fuel pump three to four times before the engine is started for the first time. To prime:
   - Turn the ignition key ON for 5 seconds.
   - Turn the ignition key OFF for 5 seconds.
   - Repeat above three to four times

© 2015 Indmar Marine Engines

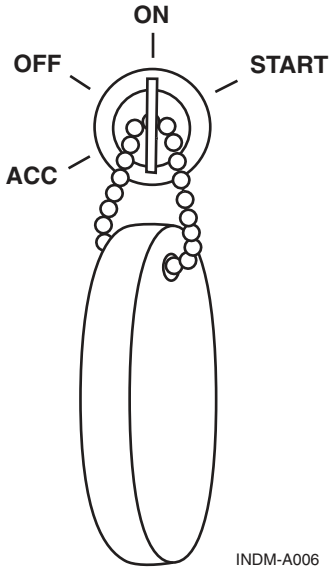

Figure 4.1 – Engine "On" Switch

Typical Start/Stop Keypad

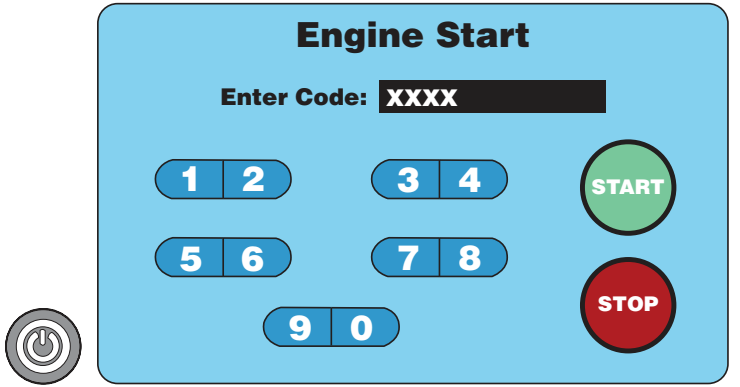

Figure 4.2 – Basic Keypad

NOTE: *Some boat manufacturers use touch pad starting rather than key switches. Refer to the boat operator's manual if your boat is so equipped.*

4. **WARNING! Operate the bilge blower for at least 4 minutes.** Start the engine (Refer to Section 5, Engine Starting Procedures) and allow it to reach normal operating temperature; keep a close eye on the gauges. If any of the gauges indicate an engine problem, stop the engine immediately and bring the boat to your Indmar dealer for assistance. *NOTICE: Do not operate the starter motor for than 15 seconds without a 2 minute cooldown period. Excessively long cranking times will permanently damage the starter motor and drain the battery.*

BREAK-IN

Taking care now to break-in your new Indmar engine is VERY important. When properly broken in, your engine will last longer, run better and require fewer repairs over its lifetime. Your new Indmar engine does not require an elaborate break-in procedure, just a little care and common sense for the first 10 hours.

Break-in Tips

- Always let engine warm up to normal operating temperature before accelerating.
- Avoid fast accelerations and don't carry (or pull) a heavy load during this period.
- If your boat is equipped with ballast tanks, do not use them during the first 10 hours.
- Check engine and transmission fluid levels frequently. During the first 50 to 100 hours, an engine can use more oil than usual. Maintain oil at proper levels at all times but do not overfill.
- Vary your boat speed during break-in. Do not run at the same speed very long.
- Observe gauge readings and check for loose mountings, fittings, nuts, bolts and clamps.
- Report abnormal operation, noises or vibrations to your dealer.

© 2015 Indmar Marine Engines

Break-in Steps

NOTICE: Do not exceed maximum RPM recommended for your engine.

1. For the first hour, do not exceed 2000 RPM; vary RPM continuously.
2. For the second hour, do not exceed 3000 RPM; vary the RPM regularly.
3. For the next seven hours, do not exceed 4000 RPM; vary the RPM regularly.

After the first ten hours but before 20 hours of operation, take your boat to the dealer for its first engine and transmission oil and filter change and engine checkup. Your Indmar dealer is best equipped to check the engine immediately after break-in.

After the break-in procedure is over, your boat may be operated at any speed. Be sure to check the wide open throttle operating range; refer to Section 2, Selecting a Propeller.

Section Five
ENGINE STARTING PROCEDURES

Before operating or maintaining the engine, review "Safety" on page 1-1.

NOTICE

Current fuel injected engines are equipped with a feature called "Smart Start." When the key is advanced to the START position, the starter will remain engaged and will crank the engine for 15 seconds or until the engine starts, whichever happens first. This same feature will prevent accidental engagement of the starter when the engine is running.

NOTICE

Some boats are equipped with a pushbutton start instead of a key switch. Pushing the start button is the same function as turning the key to the start position.

HOW TO START YOUR ENGINE

1. **WARNING! Operate the bilge blower for at least 4 minutes.** Run the blower for 4 minutes to remove explosive gasoline and battery fumes from the engine compartment.

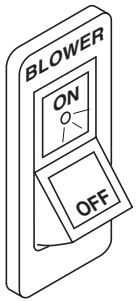

INDM-A011

Figure 5.1 – Typical Blower Switch

2. Perform the Pre-Start Checks. Refer to *Section 3*.
3. Move the shift control lever to the NEUTRAL position. Pull out the neutral safety lever (if equipped). Without advancing the throttle lever, turn the starter key to START position.

NOTICE

The throttle should be in the neutral position with the neutral detent button on the shift control box pulled out.

© 2015 Indmar Marine Engines

NOTICE

Refer to the boat owner's manual for ignition system information.

4. When the engine starts to crank, you can release the key and let Smart Start take over. When the engine starts, it will gradually slow from a fast idle to normal idle. If engine is cold, it will operate at a slightly higher idle speed until warm-up is complete. Make sure that when you do shift into gear that you are at idle speed (less than 1100 RPM). Let engine warm up to normal operating temperature before accelerating.

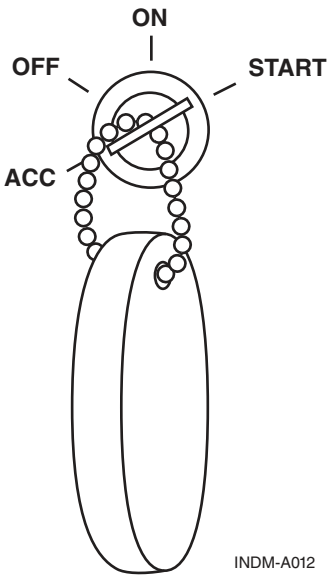

Figure 5.2 – Start Position

Typical Start/Stop Keypad

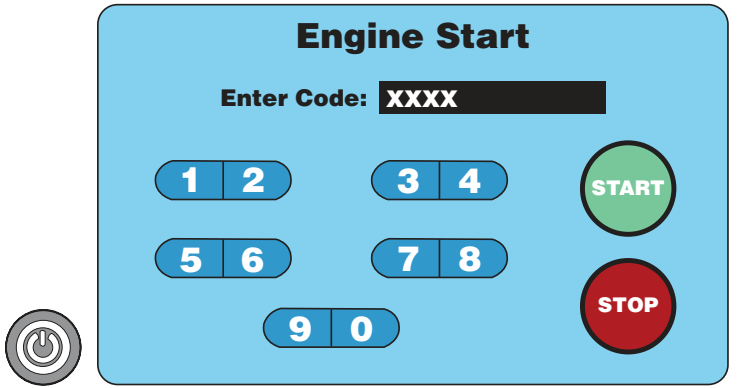

Figure 5.3 – Basic Keypad

NOTE: *Some boat manufacturers use touch pad starting rather than key switches. Refer to the boat operator's manual if your boat is so equipped.*

NOTICE

Once the engine has started, immediately check the oil pressure. Monitor the oil pressure and engine temperature closely for the first 10 minutes of operation.

IF ENGINE DOES NOT START

NOTICE

Do not operate starter motor for more than 15 seconds without a 2 (two) minute cool-down period. Excessively long cranking times will permanently damage the starter motor and drain the battery. Damage from overheating the starter motor is not covered by the warranty.

Turn the key to the START position. If the engine does not start, let the starter cool down for two minutes, disengage the shift interlock and advance the throttle lever about 1/4 of its total travel. Turn the key to START again and see if the engine starts.

If your engine does not start after several attempts, it may have too much fuel and needs to be cleared.

HOW TO CLEAR THE ENGINE

1. Check throttle lever (2, Figure 5.4) to make sure it is pulled out (or shift interlock button, 1, activated) so that boat is still in NEUTRAL.
2. Wait for 2 minutes to allow starter motor to cool.

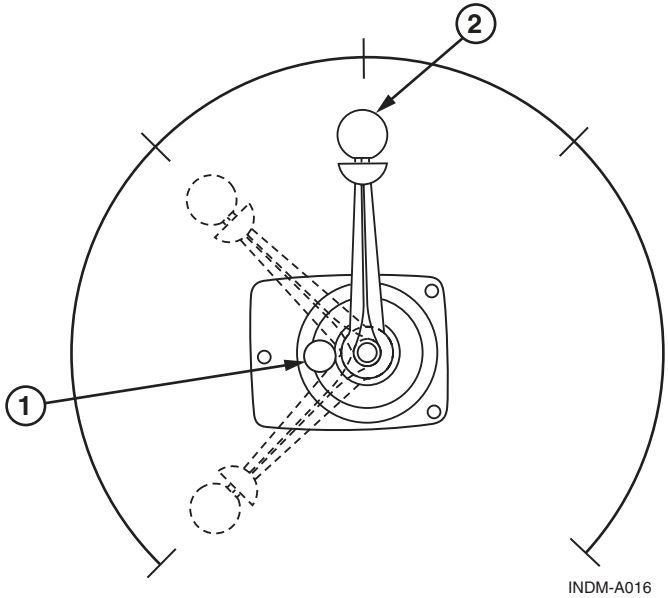

Figure 5.4 – Typical Shift/Throttle Lever

© 2015 Indmar Marine Engines

3. Disengage the shift interlock. Advance the throttle lever to full throttle and hold. Turn the key to the START position to clear extra gasoline from the engine. When the engine starts, immediately return throttle handle to IDLE position.
4. If it does not start, wait two minutes and try the sequence again.

ENGINE RESTART

1. If your engine is already warm and will not re-start, turn key to ON position and wait for about 20 seconds.
2. Make sure that your throttle lever is in NEUTRAL.
3. Turn key OFF. Try to start engine again. If it does not start disengage the shift interlock and advance throttle to about 1/4 while holding key in the START position. When engine starts, release the key and immediately return throttle to IDLE position.

NOTICE

Your engine is designed to work with the standard electronics installed in your boat. If you add electrical components or accessories, you could change fuel injection controls for your engine or could exceed the amperage capacity of the wiring and protection system. Before adding electrical equipment, consult your Indmar dealer.

Section Six
NORMAL OPERATION

Before operating or maintaining the engine, review “Safety” on page 1-1.

SENSIBLE OPERATION

The engine in your boat is built to exacting specifications and is designed to deliver unparalleled performance from idle speed to wide open throttle. Most skiing, wakeboarding and surfing is done at low to moderate RPM, and that is where we have calibrated the engines to provide the highest torque and pulling power. Although occasional operation higher RPM is acceptable, we recommend for extended cruising, that the throttle be kept at a maximum of 80%. It is also important not to overload your boat by adding more weight and ballast than the boat was designed to handle. Damage to the engine that can be attributed to excessive RPM and/or loading may not be covered by the engine’s limited warranty.

DAILY ROUTINE

1. Open the engine cover and check the bilge for water; pump bilge dry. Excessive amounts of water can indicate leakage problems from shaft/rudder logs, thru-hull fittings, loose or damaged hoses or hull damage. Excess water in the bilge will damage engine components (starters, alternators, transmissions, etc.).

NOTICE

Do not allow excessive amounts of water to remain in the bilge. Component damage due to water is not covered by the warranty.

2. Follow the starting procedures outlined in *Section Five*, *Engine Starting Procedures*.

© 2015 Indmar Marine Engines

3. Once the engine is started, allow it to reach operating temperatures of at least 120°-140°F (49°-60°C) before accelerating to speeds above 3000 RPM.

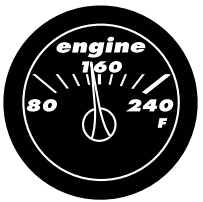

INDM-A015

Figure 6.1 – Typical Temperature Gauge

4. Monitor your gauges and warning lights frequently to ensure that engine temperatures and pressures are within the proper ranges.

INDM-A014

Figure 6.2 – Typical Oil Pressure Gauge

OPERATING THE CONTROLS

Be sure to refer to the boat owner's manual for additional information. Should there be any difference between the information presented in this manual and the boat owner's manual, the boat owner's manual should take precedence.

The shift / throttle control is important to daily operation. Have your dealer check it regularly for proper adjustment and lubrication.

NOTICE

Do not use the throttle lever during the starting sequence. Your electronic engine controls should not need any throttle movement while starting.

Your engine has a safety feature that allows the engine to crank only in the neutral position. If during the starting process your engine will not turn over, make sure that the shift / throttle control is in the NEUTRAL position and try again.

Most boats have an **engine safety switch** (1, Figure 6.3) that can be activated if the driver moves from the helm position. If you experience a “no start” condition, verify that this switch has not been disabled. If the tether cord is pulled from the switch, it disables the ignition system so the boat cannot start.

Use **caution while operating shift lever**. Shift only while the engine is at idle.

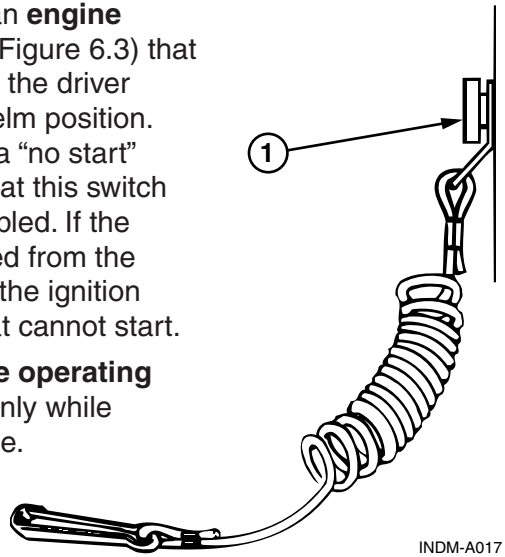

Figure 6.3 – Typical Tether Cord and Safety Switch

NOTICE

Avoid using the throttle when in reverse. This can force water backwards into the exhaust system and into the engine cylinders with major damage.

NOTICE

HYDROSTATIC LOCK: If water collects in the engine cylinder for any reason, it can cause hydrostatic lock, not allowing the pistons in the engine to move properly. Hydrostatic lock can severely damage your engine which is not covered by your warranty.

UNUSUAL VIBRATION

If your engine is used in a direct coupled application (inboard) you need to know that damage to the drive train (propeller, shaft, strut and coupling) can cause vibration. You may feel vibration if damage is severe. Vibration in the drive train will cause excessive wear on transmission and engine components.

If you believe you hit something with the propeller, or if you notice excessive vibration, see your dealer. Damage to your engine, drive train, or transmission caused by vibration is not covered by your warranty.

© 2015 Indmar Marine Engines

NOTES

Section Seven
MAINTENANCE

Before operating or maintaining the engine, review "Safety" on page 1-1.

⚠ WARNING

- **You can be injured if you try to work on your marine engine without knowing enough about your engine.**
- **Be sure you have the knowledge, experience and the correct replacement parts BEFORE you attempt any repairs.**
- **Be sure all fasteners you use are approved and rated for marine use. Use of improper parts can cause component or engine failure which may result in death or serious personal injury.**

GENERAL SERVICE NOTES

Your Indmar dealer is your best source for engine repair and maintenance. Indmar certified technicians attend ongoing service training programs and have the proper diagnostic tools plus the latest specifications for your engine.

⚠ DANGER

Electrical, ignition and fuel system components on Indmar engines comply with U.S. Coast Guard rules and regulations to minimize risks of fire or explosion. Use of replacement electrical, ignition or fuel system components, which do not comply to these rules and regulations, could result in a fire or explosion hazard and should not be used.

Your safety depends on your use of marine parts. When servicing the electrical, ignition and fuel systems, it is extremely important that all components are properly installed and tightened. If not, any electrical or ignition component could permit sparks to ignite fuel vapors from fuel system leaks, if they existed.

Since marine engines may be expected to operate at higher RPM ranges than typical automotive use for most of their life, and to operate in fresh and salt water environments, many special parts and fasteners are used which are quite different from standard automotive parts. Many parts are made from special corrosion resistant materials while other moving parts are heavy-

© 2015 Indmar Marine Engines

duty for extended, high RPM duty. If you perform minor service procedures, make sure to use genuine Indmar parts for marine use.

NOTICE

If the temperature falls below the freezing point (32°F, 0°C) the raw water portion of your engine's cooling system must be drained. Refer to Section 8, Storage and Winter Lay-Up. Failure to drain the cooling system will result in severe damage to your engine and other cooling system components.

NOTICE

Special maintenance procedures are required for engines that are operated in brackish or salt water. Refer to "Salt and Hard Water Operation" in this section for details.

NOTICE

Never operate engine without adequate water supply to the raw water pump. Failure to properly cool engine will cause severe engine damage and void your warranty.

Special Note for Boats Operating on Small Ski Lakes

Some operators choose to use their boats exclusively on small ski lakes where they never get an opportunity to run their engines for extended amounts of time (15 minutes or more) in the upper RPM range (above 4000 RPM). Many of these engines are also exposed to extended periods of idling RPM below 1000.

Boats used in these conditions often have engines that may suffer from fuel dilution of the motor oil. This condition is commonly referred to as "making oil" because the oil level on the dipstick appears to rise over time. Boats that are operated in these severe conditions will be required to have more frequent oil and filter changes (every 25 hours instead of every 50 hours).

Scheduled Maintenance Chart

ITEM	SERVICE	FIRST 10-20 HOURS	EVERY 25 HOURS[1]	EVERY 50 HOURS	EVERY 100 HOURS	EVERY 300 HOURS or ANNUALLY	EVERY 2 YEARS
Engine Oil & Filter	Change	X (Oil)	X (Oil)	X (Oil)		X (Filter)	
ZF Transmission Fluid	Change	X				X	
Walters V-Drive Oil	Change	X				X	
Indmar V-Drive Fluid	Change	X				X	
Engine Coolant	Check/Change					Check	Change
Spark Plugs*	Inspect/Clean					X	
Fuel Injectors*	Inspect/Clean					X	
Fuel Filter	Replace					X	
Flame Arrestor	Clean/Change				X		
Belts	Inspect	X			X	X	
Shaft Alignment	Check	X				X	
Spark Plug Wires*	Inspect					X	
Raw Water Pump Impeller	Inspect				X	Replace	
Breather Hose*	Clean					X	
Starter Bendix*	Grease			X		X	
Heat Exchanger	Inspect/Clean					X	
Zinc Anodes	Inspect			X			

* Services best accomplished by your Indmar dealer.
[1] Severe use applications (see special note on previous page)

© 2015 Indmar Marine Engines

ENGINE OIL

Oil Consumption

Just because an engine uses oil does not mean it is not healthy or it is defective. A marine engine gets worked very hard compared to an automobile engine. When you are cruising down the highway in your car, once it gets up to speed it only takes a small amount of the engine's power (around 20 HP) to maintain the speed of the vehicle on a flat road. A boat, on the other hand, is utilizing a significantly larger amount of the engine's output to keep the boat moving. Then add the extra load of ballast bags and a wakeboarder, surfer or skier and we are utilizing even more of the engine's capacity. The harder you work the engine, the more consumables (gasoline and oil) it needs to keep running. As long as there are not other detrimental operating characteristics such as low power, oil fouled plugs, constant smoking, etc., do not be concerned if the engine uses some oil ... it's the nature of the beast.

Checking Oil

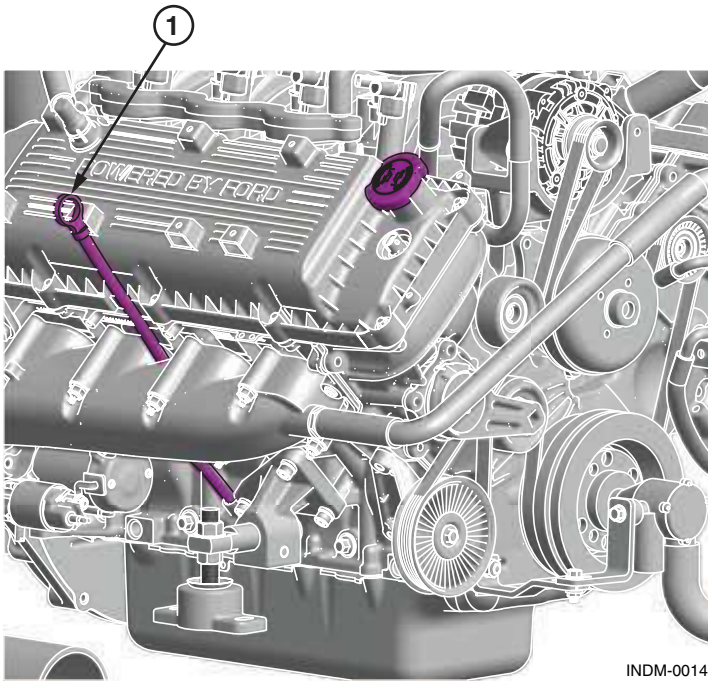

1 - Dipstick

Figure 7.1 – Engine Oil Dipstick Location

Check the oil level with the dipstick at the start of the day and then every time you get fuel. To get an accurate reading, your engine should be warm and the boat should be level.

Figure 7.2 – Dipstick

NOTICE

For best results wait about 5 minutes after you turn off the engine to allow the oil to drain into the oil pan, giving you a more accurate reading.

1. **CAUTION! Engine and engine oil may be hot.** Pull dipstick from engine.
2. Wipe oil off stick with clean towel/cloth.
3. Insert dipstick completely into the dipstick tube.
4. Remove dipstick and read oil level.
5. After reading is complete, return dipstick to tube.
6. Add oil if necessary.

Adding Oil

If oil level on the dipstick reads below the ADD mark, add only enough oil to return level to FULL mark.

NOTICE

Do not overfill. If your oil level is above the full mark on the dipstick, the engine may be damaged.

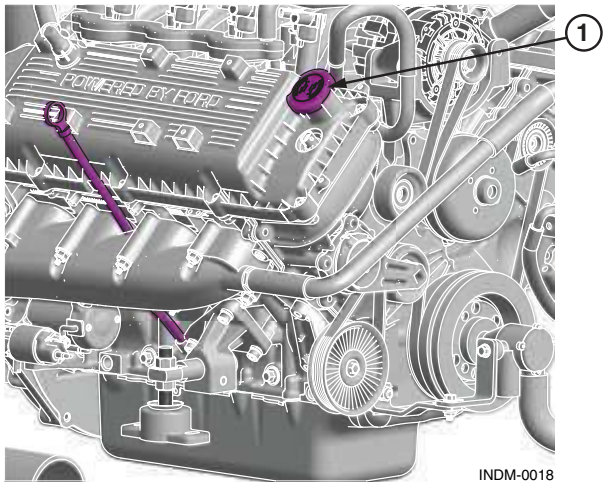

1 - Engine Oil Fill

Figure 7.3 – Engine Oil Fill

© 2015 Indmar Marine Engines

Standard and Premium Models – Semi-synthetic 5W-30 oil meeting the API rating of SN

Supercharged Models – Fully synthetic 15W-50 oil meeting the API rating of SN

NOTICE

The use of engine oil other than the recommended viscosity with an API SN designation can cause engine damage. Damage to your engine caused by the use of improper oils is not covered by your warranty.

Changing Oil

CAUTION! Engine oil may be hot. Change your engine oil after the first 10-20 hours of operation. Then change oil every 50 hours (25 in severe conditions) or annually, whichever comes first. To maximize engine life, change the oil filter at every oil change.

1 - Oil Filter **2 -** Quick Drain

Figure 7.4 – Oil Filter and Drain

Indmar recommends all engine maintenance procedures be performed by your dealer, including oil changes. If you must perform the oil change yourself, operate the engine to full operating temperature.

1. With the boat level on trailer, remove the hull or garboard drain plug and insert QuickDrain through the hull opening (outside of hull).

2. Remove QuickDrain hose cap and let oil flow into used oil container. When all oil has drained, replace cap and return QuickDrain to storage position.
3. Replace the hull or garboard drain plug.
4. **For Engines with Cartridge Style Filter:** Remove the oil filter cap from the canister assembly and wipe clean. Carefully remove and discard the O-ring from the cap and the oil filter cartridge.

   For Engines with Spin-on Filter: Position a suitable container under the filter. Unscrew and remove the filter; ensure that the filter seal is removed with the filter. Wipe up any spilled oil from the bilge and dispose of properly.
5. **For Engines with Cartridge Style Filter:** Insert a new 501022 oil filter cartridge into the canister assembly. Install and lubricate the new filter cap O-ring, replace the oil filter cap on the canister and tighten as specified on the cap.

   For Engines with Spin-on Filter: Fill a new 872025 oil filter about half full with clean engine oil. Lightly lubricate the oil filter gasket with clean engine oil and “spin on” the filter until the gasket makes contact. Hand tighten filter 1/2 to 3/4 turn after contact.
6. Add the new oil through the cap located on the engine valve cover. Fill only to the FULL mark of dipstick.
7. After initial start up, always carefully inspect oil drain plug and oil filter gasket area for leaks.
8. Stop the engine and re-check oil level. Add if necessary.

Oil Additives

Do not use oil additives. Indmar engines do not need oil additives. Use of recommended oil, along with regular oil and oil filter changes, will protect your engine adequately.

Disposing

Used engine oil contains dangerous chemicals and is considered a hazardous waste. Do not allow used oil to remain on your skin for any length of time. Make certain to drain all free flowing oil from the filter prior to disposal. Recycle used oil by taking it to a collection center. If you have a problem disposing of used oil, ask your Indmar dealer or service station for the name of a local oil recycling center for proper disposal.

© 2015 Indmar Marine Engines

ENGINE FLAME ARRESTOR

Your engine is equipped with a U.S. Coast Guard approved flame arrestor. Its purpose is to contain any backfire that may occur during the operation of your engine. Because an inboard engine is completely enclosed, an uncontained backfire can be extremely dangerous.

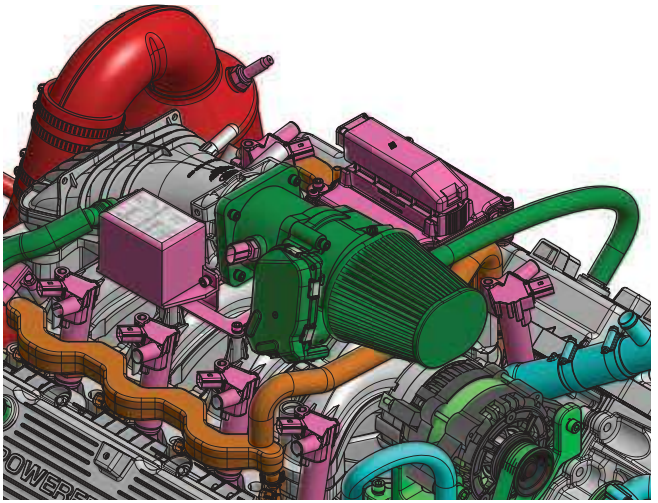

INDM-0015

Figure 7.5 – Flame Arrestor

Periodically inspect flame arrestor to prevent clogging by dirt or corrosion.

High-Performance Element-Type Flame Arrestor

Your engine is equipped with a high-performance USCG-approved element-type flame arrestor; special procedures are required. Consult your dealer for special servicing instructions for this flame arrestor.

⚠ WARNING

Do not remove the flame arrestor at any time when the engine is being started or run as it may result in fire and explosion.

ENGINE COOLING

⚠ WARNING

Running engine without adequate cooling can cause engine to overheat and may result in fire, explosion.

NOTICE

Fresh water cooled engines are shipped from the Indmar factory filled with a 50/50 mix of propylene glycol antifreeze and water. This mixture provides freeze protection down to -26°F (-32°C). If the temperature in your area is expected to go below this level of protection, see your Indmar dealer to have the antifreeze mixture adjusted for your needs. Engines shipped out of the United States may not be shipped with fluids.

NOTICE

Running your engine with your boat out of water will damage or ruin your engine. Damage to your engine caused by overheating is not covered by your warranty.

Marine engines are cooled by the raw water outside of the boat. For this reason, do not start the engine when the boat is out of the water without an engine flushing device available from your Indmar dealer.

NOTICE

A typical home water supply cannot supply enough water to operate the engine at high RPM. Do not run the engine above 1000 RPM when connected to a hose (home supply). Monitor the engine temperature to ensure the engine does not overheat.

Fresh Water (Closed) Cooling Systems

⚠ WARNING

Avoid possible skin burns, turn the engine "OFF" and allow it to cool enough so no heat is registered on the temperature gauge. Only after the engine is completely cooled is it safe for you to remove the coolant reservoir cap to check the level.

All Indmar engines covered in this manual have a closed fresh water cooling system. In the fresh water system the cooling water contains anti-freeze and re-circulates throughout the engine. If your engine is equipped with a heat exchanger tank, it has a fresh water cooling system. Raw water is pulled through the intake and flows through chambers in the heat exchanger and then discharged overboard with the engine exhaust.

© 2015 Indmar Marine Engines

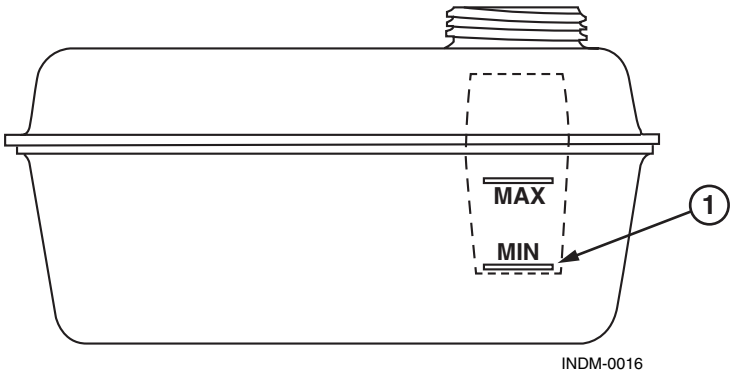

Figure 7.6 – High Fill Tank

Check coolant level daily. The level in the high fill tank should be maintained at the “MIN” mark (1, Figure 7.7) when the engine is cold.

NOTICE

- *Failure to maintain the coolant at the proper level can cause engine damage. Your warranty will not cover engine damage due to overheating or any other cause associated with improper coolant levels.*
- *Use only propylene glycol coolant. Use of any other coolant or mixing coolant types can cause engine damage. Damage to your engine from use of any other type of coolant is not covered by warranty.*
- *The coolant system should be flushed and coolant replaced every two years. This should be performed by a qualified Indmar service technician.*

When adding coolant, add only a 50/50 mix of propylene glycol coolant and distilled water in accordance with the directions on the container. Do not overfill the tank. Do not mix anti-freeze types. Do not use concentrations that exceed manufacturer’s specifications.

If the cooling system is completely empty, see your Indmar dealer for assistance immediately to purge system. Purging the system is a difficult procedure that is not recommended for the boat owner.

Salt and Hard Water Operation

All Indmar Marine engines are capable of operating in brackish or salt water as well as in hard water or water with high mineral content as long as certain precautions and maintenance procedures are followed. Your dealer will be aware if the local freshwater lakes in your area will require any special precautions to keep your engine functioning properly. Damage to the engine, both internal and external, that is a result of inadequate salt or hard water maintenance will not be covered under the Indmar Limited Warranty.

External Care

Your engine has been carefully primed and painted to protect it against rust and corrosion. To keep your engine looking like new, Indmar recommends applying an anti-corrosion compound. Regular application (every 3 months) of this protectant, particularly on exposed metal surfaces, motor mounts and electrical connections, will displace water and seal the surfaces against penetration by corrosive agents. Rinsing the engine with fresh water between applications of the protectant will further protect the exposed surfaces.

INTERNAL (COOLING SYSTEM) CARE

Fresh Water Cooling – Half Systems

A fresh water cooling system that uses anti-freeze in the engine but raw water in the exhaust manifolds is referred to as a half-system. Although the engine is protected, it is still important to flush the engine with fresh water to remove as much salt water as possible from the raw water side of the cooling system as well as from the exhaust manifolds and risers. For more convenient flushing, ask your dealer about permanently installing a flushing device that allows easy connection of a water hose.

FRESH WATER COOLING

All fresh water cooling systems, must be inspected and maintained annually, usually during winterization.

Heat Exchanger – Remove the end caps to drain and inspect the heat exchanger. Clean out any debris. Make sure you inspect the end caps for contour and cracks and replace the neoprene gaskets before putting the boat back in service. If you find rubber bits in the exchanger, check the raw water pump impeller. Note that if you use a clean-out rod, it should be softer than

© 2015 Indmar Marine Engines

the copper tubes, and should not be used to dislodge materials which are firmly stuck to the tube surface, as this could damage the tubes. The rod will assist in cleaning out bits of grass, zinc, shells, and similar materials which are just lodged in the tubes.

Zinc Anodes – The sacrificial zinc anodes frequently spall, and there will probably be zinc bits in the exchanger which should be cleaned out. Inspect the zinc anode often during use and replace when it is 3/4" (19 mm) or less.

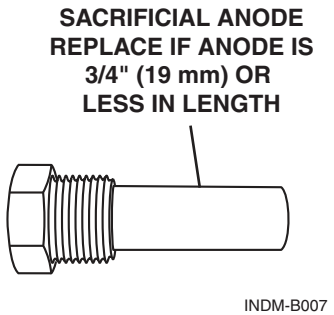

Figure 7.7 – Sacrificial Anode

Raw Water Pump – Replace the impeller if it is worn or each year. Since you must remove the impeller to inspect it, it is good practice to replace the impeller every year as a routine. Be sure there are no impeller parts lodged in the hoses or elsewhere in the system as they will eventually move to a different place and restrict water flow. The raw water pump impeller should be replaced every year or whenever it is found to be worn or have damaged blades. Be sure to reassemble with the proper gaskets.

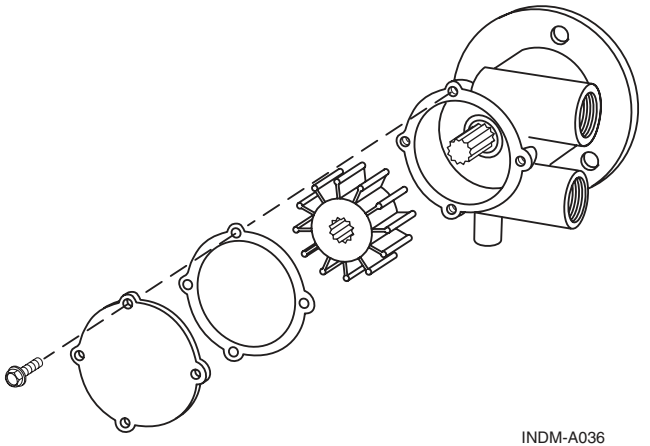

Figure 7.8 – Raw Water Pump Impeller

FUEL SYSTEM

WARNING! Gasoline is extremely flammable and highly explosive under certain conditions. The fuel system consists of fuel lines, fuel pump, and an unused fuel recovery system. Fuel in the system is under pressure and must be relieved before servicing. Because of the inherent danger of fuel leakage into the bilge, do not attempt servicing or maintaining components of the fuel system.

Your Indmar dealer has factory trained technicians and U.S. Coast Guard approved marine grade parts required for fuel systems.

TRANSMISSIONS

NOTICE

It is important to keep the water level in the bilge below the output shaft of the transmission. If the water level in the bilge is too high, the coupler can splash water inside the engine compartment and cause corrosion problems. High water levels can also allow water intrusion into the transmission causing severe damage.

Indmar engines are equipped with one of these marine transmissions:

- ZF Hurth Marine In-Line
- ZF Hurth Marine V-Drive
- Walters V-Drive and ZF Hurth In-Line
- Indmar V-Drive

© 2015 Indmar Marine Engines

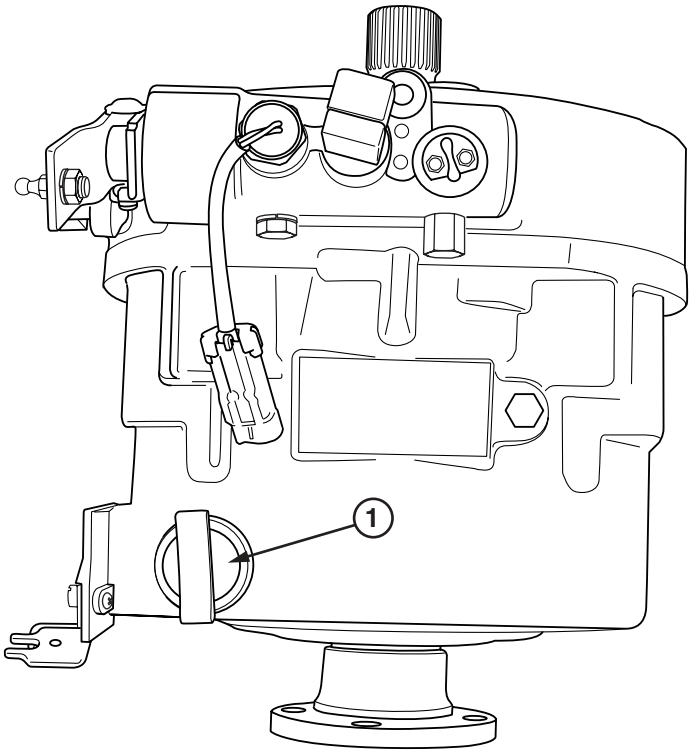

1 - Dipstick

Figure 7.9 – Midships Mount, ZF Hurth Marine In-Line

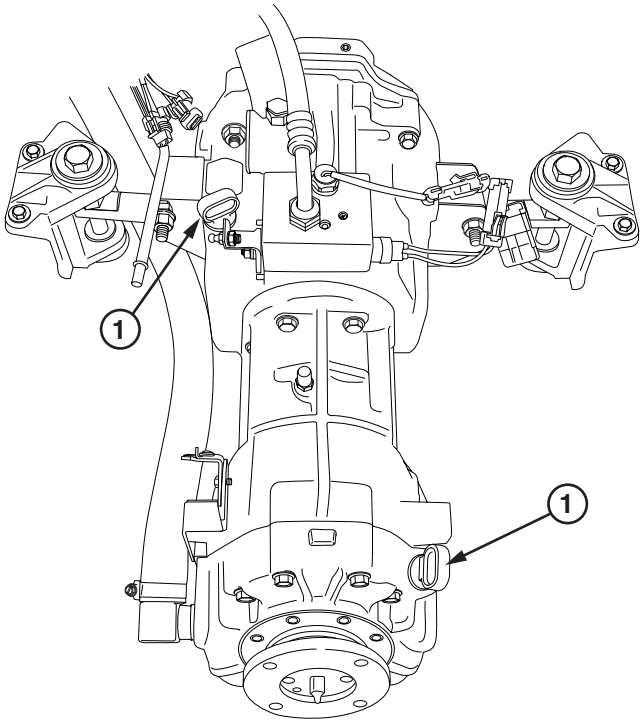

1 - Dipstick

Figure 7.10 – Stern Mount, ZF Hurth Ski-Vee or Indmar-Vee Throughshaft Models

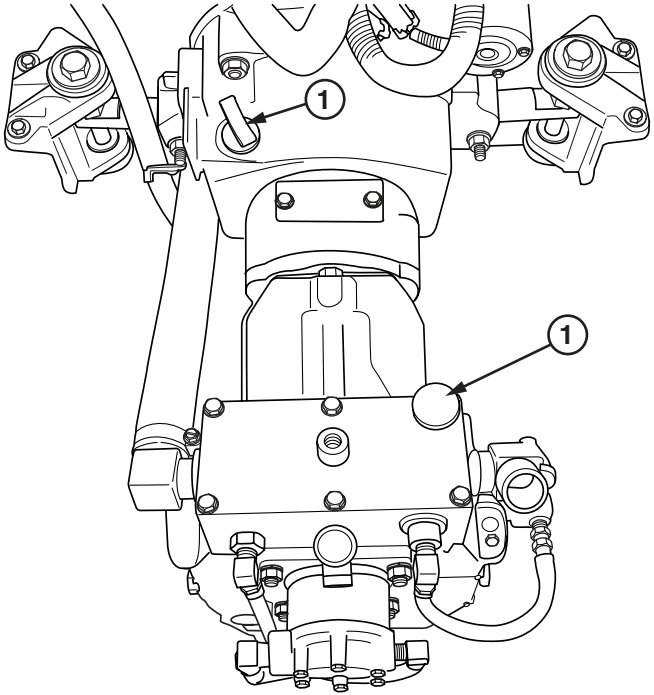

1 - Dipstick

Figure 7.11 – Stern Drive, Walters V-Drive and ZF Hurth In-Line

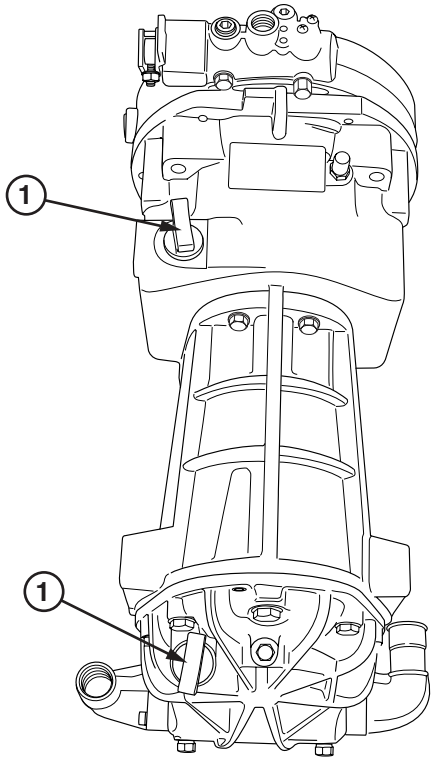

1 - Dipstick

Figure 7.12 – Stern Mount, ZF Hurth Ski-Vee or Indmar-Vee Undershaft Models

© 2015 Indmar Marine Engines

A separate owner's manual covering basic maintenance is provided with each transmission. The transmission fluid must be changed and the filter cleaned after the first 10-20 hours of operation and once each year thereafter. Refer to the transmission owner's manual for information.

The transmission is water cooled by a heat exchanger connected to the engine cooling system. The transmission fluid level should be checked daily. Fluid level is to be maintained at a level between the "Full" and "Add" marks on the transmission dipstick.

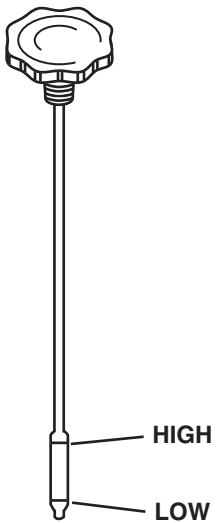

Figure 7.13 – Walters V-Drive Dipstick

Overfilling the transmission with fluid will cause the seals to leak, and eventually lead to overheating. When there is too little fluid, over-heating will result.

If the engine uses the Walters V-Drive, it is equipped with a ZF Hurth in-line transmission for shifting. Be aware that the Walters V-Drive uses motor oil for lubrication, while the ZF Hurth transmission uses Automatic Transmission Fluid. The Walters V-Drive also has a low oil pressure sensor and a dashboard mounted light. If low oil pressure is sensed, this lamp will light indicating the problem. Shut down the engine and check the transmission fluid level. Refer to Section 2, Check Transmission Light for more information.

If transmission service is required, note the Serial Number of the transmission stamped onto the ID plate on the top of the transmission housing. It is good practice to note the serial number and keep it with other owner related information.

Checking/Adding Transmission Fluid

⚠ CAUTION

Transmission fluid may be hot.

NOTE: *Refer to page 7-18 for correct transmission and fluid capacities for your model of transmission.*

Checking Fluid – Shifting Portion – Red Dipstick

1. Start the engine and let it come up to operating temperature (160°F).
2. Shift the transmission to FORWARD and back to NEUTRAL, and then to REVERSE and back to NEUTRAL. Shut the engine off.
3. Within 30 seconds of engine shutdown, remove the dipstick from the shifting portion of the transmission, wipe it clean and place the dipstick in the transmission. Do not thread it in.
4. Remove the dipstick and check the fluid level. The level should be between the two marks on the dipstick.
5. Adjust the fluid level as needed.

NOTE: *Once you have established the appropriate fluid level, it may be beneficial to let the transmission cool down (preferably overnight) and all of the fluid drain back. Pull the dipstick and wipe it off. Reinstall the dipstick, but do not thread it in. Remove the dipstick and mark a "Full Cold" level on the dipstick for ease of checking in the future. This level may be above the full mark on the dipstick.*

Checking Oil – V-drive Portion – Yellow Dipstick

1. Remove the dipstick and wipe it clean.
2. Reinstall the dipstick, but do not thread it in.
3. Remove the dipstick and check the oil level. It should be between the two marks on the dipstick.
4. Adjust the fluid level as required.

NOTICE

Do not overfill the transmission. Overfilling can damage the transmission. Damage to your transmission due to too much or too little fluid is not covered by your warranty.

© 2015 Indmar Marine Engines

TRANSMISSION	MODEL	CAPACITY	FLUID TYPE
ZF Hurth In-Line	ZF 45C	1.7 qt (1.6 L)	Indmar ATF 872006
ZF Hurth In-Line	ZF 45A	2.12 qt (2 L)	15W-40 Motor Oil
ZF Hurth In-Line	ZF 63A	4.2 qt (4 L)	15W-40 Motor Oil
ZF Hurth V-Drive	ZF 63IV	4.2 qt (4 L)	15W-40 Motor Oil
ZF Hurth V-Drive	ZF 45IV	2.12 qt (2 L) Main Gearbox	Indmar ATF 872006
		1.0 qt (0.946 L) V-Drive Unit	Indmar ATF 872006
Walters V-Drive	RV-26D-71V	1.0 qt (0.946 L)	15W-40 Motor Oil
Indmar V	–	2.3 qt (2.18 L) Main Gearbox	Indmar ATF 872006
		1.25 qt (1.18 L) V-Drive Unit	Indmar Synthetic 50 Transmission Oil 872009

ELECTRICAL SYSTEM

The electrical system on all Indmar engines is protected by a 40A main circuit fuse. If the engine will not crank with the battery switch in the ON position, locate the fuse in the electrical box on the engine. Remove the cover from the electrical box and check the 40A fuse. If the fuse is blown, there is a spare in the electrical box. There are also other spare fuse locations in the electrical box. Always keep spare fuses in these locations. If you use the 40A fuse, obtain another from your dealer or from an automobile parts store, and replace the spare fuse in the electrical box cover. If the system continues to blow fuses, take the boat to your dealer and have the electrical system checked.

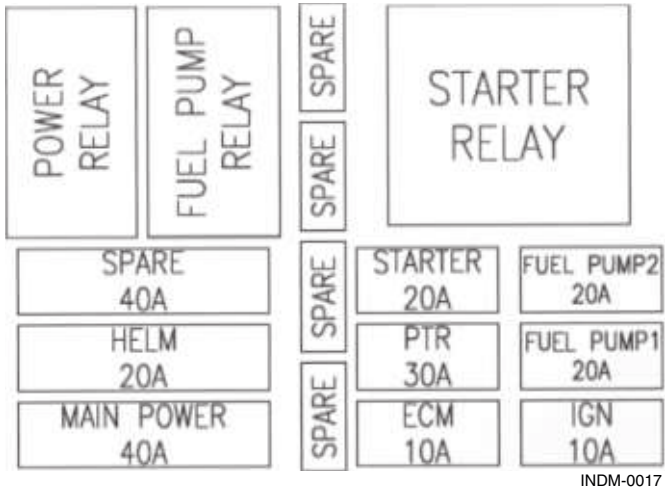

Figure 7.14 – Fuse Box Layout

Fuses are located on top of the engine near the intake. To remove or inspect a fuse, remove molded plastic cap from fuse holder. Inspect fuse and replace if it is defective. Make sure to replace the fuse block cover when finished.

© 2015 Indmar Marine Engines

WIRING

If during maintenance or inspection, it becomes necessary to move or reposition any of the engine's wiring or wire harnesses, verify that wiring is returned to its original position, and that all harnesses are routed correctly. If a wiring clip or retainer breaks, replace it immediately. Wiring is specifically routed to eliminate problems related to engine heat and spray, immersion in liquids, or contact with rotating assemblies. Electrical problems can result if wiring is moved from its original position and is not properly repositioned.

Charging System Maintenance / Guidelines

Adhering to the following procedures and guidelines will ensure proper operation of your battery charging system. Watch out for:

1. **REVERSE BATTERY POLARITY:** When reconnecting the battery after winter storage, it is easy to accidentally reverse the battery leads and connect positive to negative and negative to positive. This generally results in a large arc at the battery terminals and failure of the diodes and/or regulator in the alternator as well as other components in the electrical system of the engine or boat that are polarity sensitive such as ignition modules, ECMs, stereos, etc. For several components to fail at the same time, the failures are generally due to some external influence such as reversed battery leads or reversed jumper leads. These types of failures are not covered by Indmar's Limited Warranty.
2. **POOR CONNECTIONS:** When there is a defective connection between the battery and alternator, charging current will be forced to find an alternate route to flow out toward the battery. A defective connection may be caused by corrosion or an open circuit from a break in several battery cable strands or simply a loose connection. The alternate route that current finds usually leads to excessive current flow, causing the diodes in the alternator to overheat and fail. It is critical that all electrical connections are clean and tight. These types of failures are not covered by Indmar's Limited Warranty.
3. **POSITIVE CIRCUIT FAULTS:** A bad connection or open circuit between the alternator output terminal and the positive battery terminal will force the charging current to follow a parallel route through the diode trio and out of the alternator. This heavier than normal current flows though the diodes and will

cause them to overheat and fail. Consequently, if you have replaced an alternator because of bad diodes, and the replacement fails for the same reason, there is likely a bad connection between the alternator BAT (B+) terminal and the positive side of the battery circuit. Have your dealer do a voltage drop test to check the entire circuit. Also, never remove a battery cable when the engine is running. This will cause the diodes to overheat and fail. Never use the alternator to bring an undercharged battery to a fully charged condition. The excessive current draw can overheat the diodes and cause them to fail. These types of failures are not covered by Indmar's Limited Warranty.

4. **NEGATIVE (GROUND) CIRCUIT FAULTS:** The primary mount of the alternator serves as the negative ground for the alternator. This connects the alternator to the engine block which is in turn connected to the negative post of the battery via a ground stud on the engine. The ground stud on the engine holds all of the wiring harness grounds and battery ground with one nut and it is known to occasionally become loose, disconnected or corroded. When the alternator loses its ground, it can become damaged as it surges and could cause catastrophic damage to the voltage regulator within the alternator. It is important to keep the ground wires, stud and nut clean and tight and check it often. These types of failures are not covered by Indmar's Limited Warranty.

5. **OVERLOADED:** Never use the alternator to bring a dead or undercharged battery to a fully charged condition. The excessive current draw can overheat the diodes and cause them to fail. If you have a dead battery, use a battery charger instead. If you experience a battery that is constantly being discharged, look for the cause, such as bad battery or aftermarket accessories, or defective electrically operated accessories. Find the cause of the discharge before permanent damage is done. These types of failures are not covered by Indmar's Limited Warranty.

© 2015 Indmar Marine Engines

General Lubrication

STARTER

Apply a dab of multipurpose grease onto the starter bendix every month or 50 hours of operation. Your starter has been sprayed with lubrication internally to extend its longevity. Corrosion, rust and water intrusion will not be covered under Indmar's Limited Warranty.

SHIFT AND THROTTLE CABLES

Spray exposed throttle cable and transmission cable ends with a corrosion protectant and lubricant. Check boat owner's manual for recommendations. Work the cable back and forth, and then spray to completely lubricate. In highly corrosive locations, a complete cable lubrication system may be purchased through your Indmar dealer.

Accessory Drive

The serpentine drive belt on your engine drives the coolant circulation pumps and the alternator. Tension is automatically applied to the belt by a spring loaded tensioner so there are no adjustments required. The belt should be checked periodically for damage or wear. Figure 7.16 shows the correct routing of the belt in the event that it needs to be replaced.

Figure 7.15 – Serpentine Belt Routing

Section Eight
STORAGE AND WINTER LAY-UP

Before operating or maintaining the engine, review "Safety" on page 1-1.

Storage or winter lay-up requires preparation to prevent damage to the power package. While preparing the power package for winter lay-up, annual maintenance tasks should also be performed.

Without proper preparation, storage over a long period of time may cause internal engine and transmission parts to rust due to lack of lubrication. Also, if the boat is stored where the temperature falls below freezing, any water not drained from the engine may freeze, resulting in severe damage. Damage that is the result of improper storage is not covered under terms of Indmar's Limited Warranty.

NOTICE

Because of the complexity of preparing your engine for winter storage, and the danger of catastrophic engine damage from freezing water in the engine, it is recommended that you have your dealer perform winterization procedures. Damage due to improper winterization/storage is not covered by product warranty!

To properly winterize your engine, you MUST be able to bring the engine up to operating temperature. To accomplish this, your boat must be in the water, or be attached to a water supply using a hose and suitable adapter that will allow an uninterrupted supply of water to the engine.

NOTICE

This procedure covers only the power package portion of your boat. Consult your boat owner's manual or boat manufacturer for specific boat winterizing instructions.

© 2015 Indmar Marine Engines

GENERAL PREPARATION

Before beginning you will need the following supplies:

- Indmar Fuel Treatment
- 8 quarts of Appropriate Engine Oil
- Indmar Oil Filter (P/N 872025 or 501022)
- 4-6 ounces of Fogging Oil
- 1 can Corrosion Protectant and Lubricant
- Transmission Oil (As Required)
- Indmar Marine Waterproof Grease
- Pipe Thread Sealant
- Anti-Freeze Tester suitable for Propylene Glycol
- Propylene Glycol Anti-Freeze (As required)

Fuel System Treatment

⚠ WARNING

Running the engine with the flame arrestor removed increases the possibility of fire or explosion if engine backfire occurs and gasoline fumes are present. If the engine is operated without the flame arrestor secured, extreme care must be taken to ensure that the engine compartment is well ventilated and that no fuel leaks are present.

1. If the boat is to be placed in storage with fuel in the tank(s) that does not contain alcohol, fill the fuel tank(s) with fresh fuel and a sufficient amount of gasoline stabilizer to treat the entire tank. Follow instructions on the container.
2. Start the engine and operate at Idle RPM until the engine reaches normal operating temperature. (If using a hose and adapter, adjust the faucet to avoid over-cooling the engine at low RPM.) Run the engine for at least 15 minutes to ensure that the fuel stabilizer enters the engine's fuel system.

NOTICE

Indmar does not recommend applying fogging oil while the engine is running. The fogging oil could damage the catalytic converter. The cylinders must be protected by removing the spark plugs and applying the fogging oil directly into the cylinders.

3. After all the cylinders have been treated, crank the engine to spread the lubricant on the cylinder walls. Replace the spark plugs in the engine.
4. Perform annual maintenance; refer to Section 7, Scheduled Maintenance Chart.

Seawater Cooling System Preparation

Your Indmar engine is equipped with a cooling system that uses a 50/50 propylene glycol antifreeze and water mixture in the engine block and raw water in the heat exchanger and exhaust system. If the boat is kept in an area where the temperature falls below the freezing point of water (32°F or 0°C), the cooling system must be winterized to prevent freeze damage to the engine.

The protection level of the antifreeze must be tested using an antifreeze tester that is designed to test propylene glycol antifreeze. These testers are available at automobile parts stores and can also be found on many websites that sell automotive related tools and equipment. Follow the instructions that come with the tester and make sure the antifreeze in the engine will protect to lower than the lowest temperature that your part of the world experiences.

© 2015 Indmar Marine Engines

The raw water side of the cooling system is protected from freezing by draining the raw water from the system. The drain points are indicated on the winterization points drawings for Premium (Figure 8.1) and Standard (Figure 8.2).

Premium Models

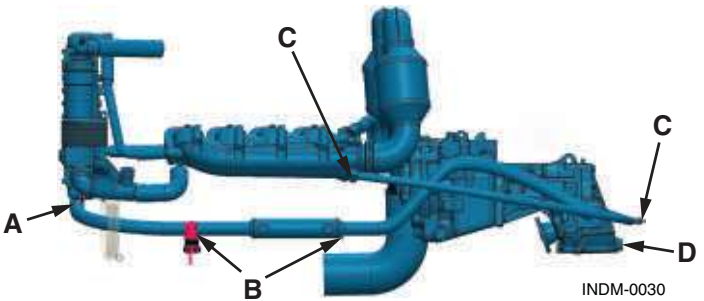

Figure 8.1 – Premium Models Cooling System Draining

Water Drain Points Premium Engines

A. Remove plastic drain plug from heat exchanger.

B. Remove water flow sensor or transmission cooler drain plug.

C. Manifolds will drain through dripless packing. If no crossover hose or dripless packing, remove drain plug from each exhaust manifold.

D. Remove drain plug/anode from V-drive.

Standard Models

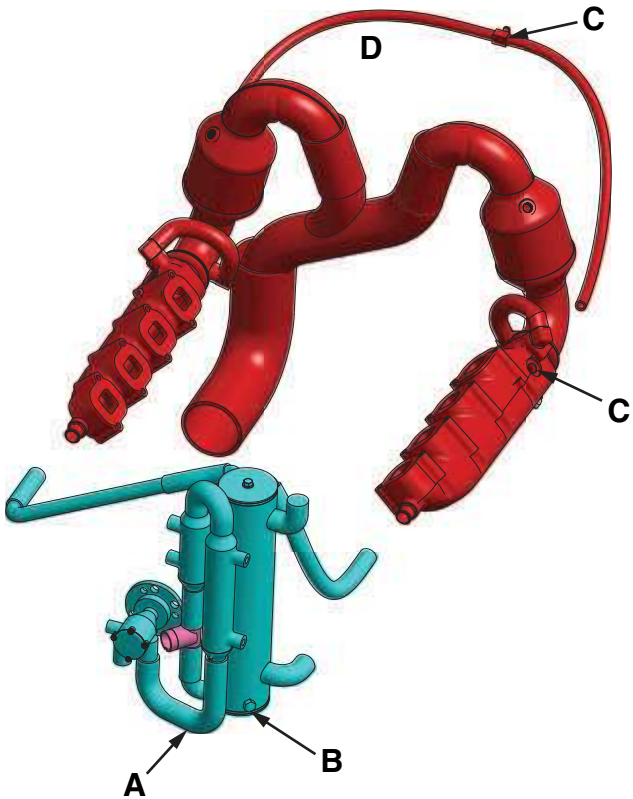

Figure 8.2 – Standard Models Cooling System Draining

Water Drain Points Standard Engines

A. Remove plastic drain plug from tube between raw water pump and transmission cooler.

B. Remove drain plug/anode from heat exchanger.

C. Manifolds will drain through dripless packing. If no crossover hose or dripless packing, remove drain plug from each manifold.

D. NOT SHOWN IN DRAWING. Remove drain plug/anode from V-drive.

© 2015 Indmar Marine Engines

Drive Train Preparation

1. Change the transmission fluid following the instructions in the transmission owner's manual.
2. Drain the water from the cooling section of the V-drive transmission.
   a. ZF Ski-Vee. On these units, you can drain the water by removing the two anodes or by removing one of the hoses that are attached to the unit. If the sacrificial portion of the anodes is less than 3/8" (9 mm), they must be replaced.

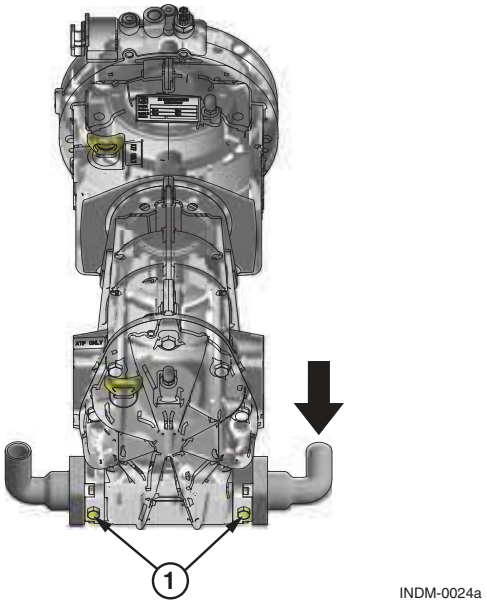

1 - Anodes

Figure 8.3 – ZF Ski-Vee Water Drains

b. ZF Through-Shaft Ski-Vee. On these models, you must remove the hose from the fitting that is pointed toward the engine to drain the cooler.

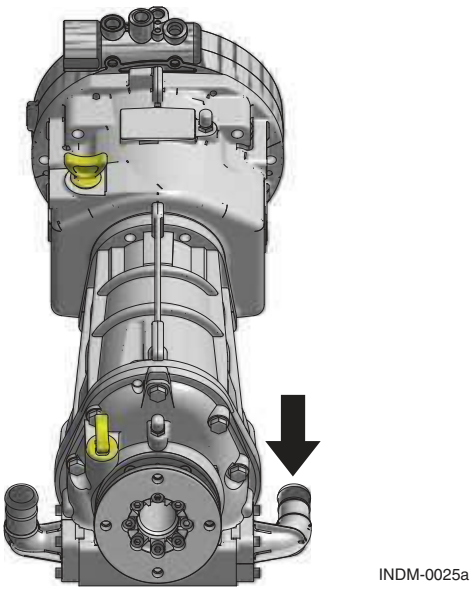

Figure 8.4 – ZF Through-Shaft Ski-Vee Water Drains

c. Indmar-Vee. On these models, you must remove the plug from the rear of the V-drive to drain the cooler.

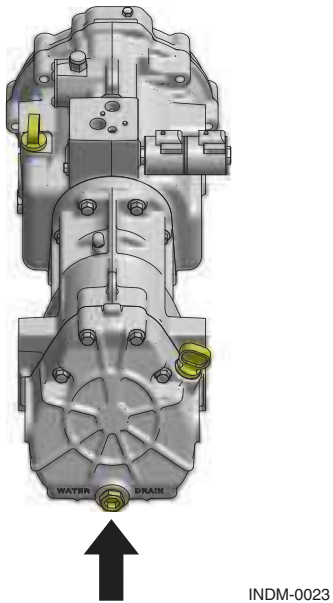

Figure 8.5 – Indmar-Vee Drain Plug

© 2015 Indmar Marine Engines

d. Indmar-Vee Through Shaft. On these models, you must remove the plug from the rear of the V-drive to drain the cooler.

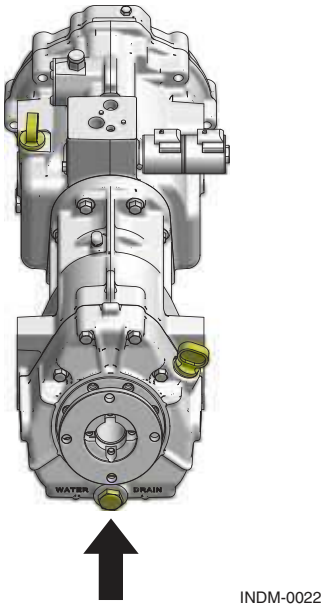

Figure 8.6 – Indmar-Vee Through Shaft Drain Plug

e. Walter V-Drive. On these models, you can drain the water from the cooler by removing one of the water drain plugs.

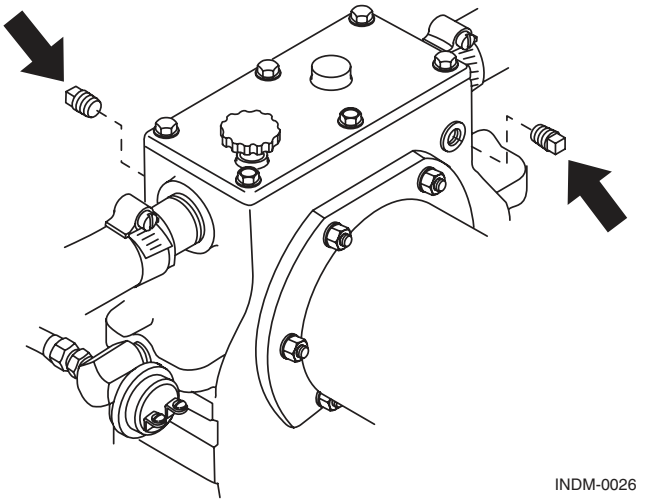

Figure 8.7 – Walter V-Drive Drain Plugs

General Power Package Preparation

1. Clean dirt, grime and grease from painted surfaces of the engine and drive train.
2. Touch up painted areas of the engine and transmission.
3. Coat unpainted components (engine mounts, transmission mounts, etc.) with Indmar Marine Waterproof Grease.

REACTIVATING ENGINE AFTER EXTENDED STORAGE

NOTICE

Use caution when connecting the battery cables. Improperly connecting the battery cables or using the wrong battery type can damage electrical components. These damages are not covered by your warranty.

1. Charge and reinstall the battery in the boat. Make sure the terminals are clean and tight.
2. Reinstall the cap or the small hose on the tee fitting that is part of the hose that goes between the two exhaust manifolds.
3. Reinstall the water pump impeller. Be sure to use a new gasket for the housing cover.
4. Reinstall the anode/drain plug in the raw water side of the heat exchanger. Apply pipe thread sealant to the threads to make sure there are no leaks.
5. Inspect the accessory drive belt and make sure that it is routed properly.
6. If the fuel tank was drained, fill the tank with fresh fuel that does not contain alcohol.
7. Check all fluid, oil, and coolant levels on the engine and drive train.
8. Check the engine compartment and bilge for nesting animals. Clean as necessary. Check for any damage or evidence of fluid leaks.

© 2015 Indmar Marine Engines

9. Check alignment between the output flange on the transmission and the prop shaft flange. If the maximum feeler gauge that can slip between the flange faces at any point is 0.003" (0.08 mm), the unit is properly aligned. If a thicker gauge can be inserted at any point, the engine must be readjusted until proper alignment is obtained.

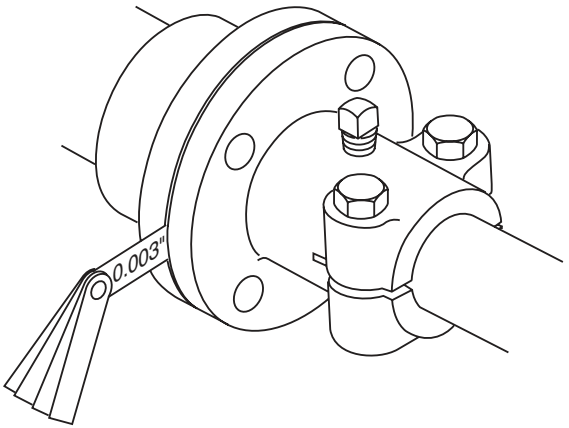

INDM-A037

Figure 8.8 – Prop Shaft Flange Alignment

NOTE: *With the boat in the water or a hose and adapter installed, cycle the key switch ON, then OFF, for five second intervals 3-4 times before cranking the engine to allow the fuel pump to prime the fuel lines.*

10. Review boat manufacturer's starting procedure.
11. Start the engine. If you experience a no-start condition, do not crank the engine for more than 15 seconds without allowing a two minute cool-down period. When the engine starts, keep a close watch on the gauge readings. Check all of the hoses and drain plugs for leaks. Listen for abnormal noises. Run the engine long enough to reach normal operating temperature and reinspect for leaks. If no leaks are found, the boat is ready for operation.

EXTENDED STORAGE

If you must store your boat for an extended period of time (more than normal off-season storage), additional procedures are required. The procedures for preparing for extended storage and recommissioning after extended storage are best accomplished by an authorized Indmar dealer.

1. Follow the normal procedures for off-season storage.
2. Disconnect the propeller shaft from the output shaft coupling on the transmission.

Recommissioning

1. Follow the normal procedures for recommissioning after off-season storage.
2. Check the propshaft to transmission coupler alignment. Adjust as necessary. Connect the propshaft and transmission coupler.
3. Remove and clean the fuel injectors and flush the entire fuel system.
4. Install a new fuel filter.
5. Change all of the engine fluids and lubricants. Install a new oil filter.
6. Install a new raw water pump impeller.
7. Check all belts and hoses for cracks and wear. Replace as needed.
8. Install new spark plugs. Check the wires for cracks and damage.
9. Charge the battery and check battery connections to make sure they are clean and tight.
10. Put fresh gasoline in the fuel tank. Cycle the key switch several times to make sure the fuel system is full and primed. Install an appropriate tester and verify the fuel pressure is at specification.
11. Apply water to the engine's cooling system and start the engine. While the engine is warming up, check for leaks and smooth engine operation. Monitor the fuel pressure to make sure it stays in specification.
12. Put the boat in the water and operate it at various RPM. Monitor the engine temperature, oil pressure, charging voltage and fuel pressure to make sure all stay within specification. Check the various engine operating parameters with a diagnostic scan tool to make sure all parameters are within specification.

© 2015 Indmar Marine Engines

NOTES

Section Nine
TROUBLESHOOTING

Before operating or maintaining the engine, review “Safety” on page 1-1.

Your Indmar engine is manufactured under strict quality control standards. It is tested along with a full spectrum gas analysis. It is operating at optimum levels before it is shipped.

Difficulties can occur. Use the following problem diagnosis charts to help pinpoint problems. In most cases, you will need the assistance of your Indmar dealer to correct the cause of the problem.

Poor Gas Mileage

- Fouled spark plugs
- Plugged flame arrestor
- Poor driving habits
- Plugged positive crankcase ventilation system
- Black smoke at exhaust outlet shows rich gas mixture
- Excessive boat loads (weight)
- Damaged or dirty hull
- High altitude adjustment required
- Adjustment for temperature extremes required

Hard Cold Start

- Weak or discharged battery
- Loose coil or ignition wires
- Engine flooded
- Fouled spark plugs
- Lack of fuel
- Battery cables loose or corroded
- Loose electrical grounds at engine
- Ignition switch problems
- Dirt or water in fuel system
- Engine needs tune-up

© 2015 Indmar Marine Engines

Poor High Speed Performance

- Fouled spark plugs, incorrect spark plug gap or heat range
- Dirt or water in fuel
- Lack of fuel
- Restricted exhaust system
- Plugged flame arrestor
- Insufficient air supply to engine
- Engine needs tune-up
- Damaged or incorrect propeller

Engine Cranks / Won't Start

- Weak or shorted coil; no spark at plugs
- Loose engine grounds
- Lack of fuel
- Weak or discharged battery
- Boat Engine Safety switch not attached
- Vapor lock

Idle – Misses or Runs Rough

- Spark plugs fouled or cracked
- Spark plug or distributor wires loose or shorted
- Plugged positive crankcase ventilation system
- Engine in need of tune-up

Hard Start Hot

- Flooding condition
- Loose electrical ground at engine
- Plugged flame arrestor
- Fouled spark plugs
- Loose coil or ignition wires
- Battery cables loose or corroded
- Weak or discharged battery

Engine Won't Crank

- Weak or discharged battery; loose or corroded battery cables
- Defective neutral safety switch or adjustment needed
- Defective starter motor
- Ignition switch problems
- Hydrostatic lockup – remove spark plugs to look for water or gasoline in cylinders
- Seized engine – turn crank pulley with socket and ratchet

© 2015 Indmar Marine Engines

NOTES

Appendix – A
MAINTENANCE COMPONENTS AND FLUIDS

Engine Oil	Standard/Premium Models: Semi-synthetic 5W-30 oil meeting the API rating of SN, P/N 872004 Supercharged Models: Fully synthetic 15W-50 oil meeting the API rating of SN, P/N 872007
Engine Oil Filter (Cartridge and O-ring)	P/N 501022S
Engine Oil Filter (Spin-on)	P/N 872025
Engine Coolant (for fresh water cooled systems)	50/50 mix propylene glycol and distilled water
Flame Arrestor	P/N 525900
Indmar V-Drive	Main Gearbox - Indmar ATF, P/N 872006 V-drive - Indmar Synthetic 50 Transmission Oil, P/N 872009
ZF Hurth Transmission (1:1 Transmission) (Ski-Vee Transmission)	Indmar ATF, P/N 872006
ZF V-Drive and Reduction Gears	15W-40
Walters V-Drive	15W-40, API Service SL/SJ/CI-4, CH-4, CG-4
Engine Fuel (for storage)	Marine formula fuel stabilizer, P/N 872008
Engine Cables (for corrosion protection)	Corrosion protectant and lubricant
Starter Bendix Lubricant	Multipurpose grease
Alternator Belt (Standard and Premium Models)	P/N 725903
Alternator Belt (Supercharged Models)	P/N 725902
Thermostat	P/N 985901
Spark Plugs	P/N 597037-16
Surface Corrosion Protection	Corrosion protectant and lubricant
Engine Fogging Oil	Fogging oil

© 2015 Indmar Marine Engines

Indmar MARINE ENGINES

SERVICE LOG

Date	Maintenance Performed

Appendix – B
ENGINE SPECIFICATIONS

Number of Cylinders	8
Displacement	376 cid (6.2 L)
Bore	4.015" (102 mm)
Stroke	3.74" (95 mm)
Compression Ratio	9.8:1
Compression Pressure	Minimum 100 psi (690 kPa)
Idle RPM in Neutral	650 RPM
Operating Range at WOT	5000-5400 RPM
Minimum Oil Pressure at Idle	8 psi (55 kPa)
Oil Filter	Indmar P/N 872025 (spin-on) P/N 501022S (cartridge)
Fuel Pump Pressure	60 psi (414 kPa)
Electrical System	12V DC Negative (-) Ground
Minimum Battery Requirements	650 CCA/700 MCA/120 AH
Firing Order	1-5-4-8-6-3-7-2
Spark Plug Type (16 Plugs Required)	597037
Spark Plug Gap	0.044" (1.12 mm)
Thermostat	160°F (71°C)

Fluid Capacities	
Engine Oil*	8 qt (7.6 L)
Closed Cooling System	12-14 qt (11.4-13.3 L)
In-Line 1:1 Transmission*	1.7 qt (1.6 L) Indmar ATF
In-Line Reduction Gear*	2.12 qt (2 L) 15W-40 Motor Oil
ZF Hurth In-line	4.2 qt (4 L) 15W-40 Motor Oil
ZF Hurth V-Drive	4.2 qt (4 L) 15W-40 Motor Oil
ZF Ski Vee Transmission*	2.12 qt (2 L) Main Gearbox, 1.0 qt (0.946 L) V-Drive - Indmar ATF
Walter V-Drive*	1.0 qt (0.946 L) 15W-40 Motor Oil
Indmar V-Drive*	2.3 qt (2.18 L) Main Gearbox, Indmar ATF 1.25 qt (1.18 L) V-Drive unit, Indmar Synthetic 50 Transmission Oil

* Always fill to full mark on dipstick. Do not overfill.

© 2015 Indmar Marine Engines

NOTES

Appendix – C
INDMAR LIMITED PRODUCT WARRANTY
Ford-Based Engines

1. **Warranty.** Indmar Products Co., Inc., 5400 Old Millington Road, Millington, Tennessee 38053 ("Indmar"), warrants that its marine propulsion engine and the parts related thereto (collectively, "Product") are free from material defects in material and workmanship under normal use and service during the applicable warranty period as set forth herein.

2. **Coverage.** Indmar shall replace or repair any defect in material or workmanship relating to the Product under the terms and conditions of this Limited Product Warranty. Components or parts of the Product that Indmar determines in its sole discretion to be "wornout" from use are specifically excluded from this Limited Product Warranty. If a Product or defective part thereof is, upon examination by Indmar, determined by Indmar to be defective, Indmar shall repair, or at its sole option, provide either a new or rebuilt replacement of equivalent quality. Indmar shall have the sole discretion to determine whether the replacement, if provided, shall be a new or rebuilt replacement. Indmar's sole obligation under this Limited Product Warranty is limited only to the foregoing obligations as stated herein.

3. **Customer.** This Limited Product Warranty is extended only to the original retail purchaser of a boat or the original lessor, in the case of a leased boat, in which a Product has been installed pursuant to Indmar's approval or authority ("Customer"). In the event that the product is used in conjunction with a demonstrator or boat show display, the warranty begins from the earlier of the date of delivery to the retail purchaser or such time as the boat installed with the Indmar product attains more than 50 hours of use regardless of the source of such use. If the boat is sold or traded prior to the end of the applicable warranty period set forth herein, the remainder of the applicable warranty period is transferable to the new owner or new lessor (also referred herein as "Customer") provided that all of the requirements for a valid transfer as set forth in this Limited Product Warranty are satisfied. No transfer of any rights by any Customer shall be deemed valid or effective unless and until approved in writing by Indmar. Warranties of any nature to any person other than those described herein are specifically excluded.

4. **Excluded Items.** In addition to, and without in any way limiting, any exclusion set forth elsewhere in this Limited Product Warranty, this Limited Product Warranty shall not apply to the following items:

   (a) Shop supplies used in performing work pursuant to this Limited Product Warranty, including, but not limited to, rags, sealants and lubricants.

© 2015 Indmar Marine Engines

(b) Incidental and consequential damages, including, but not limited to, storage charges, telephone or rental charges of any type, inconvenience or loss of time or income.

(c) Minor adjustments and tune-ups, including, but not limited to, checking, cleaning or adjusting spark plugs, filters, belts, controls and checking lubrication.

(d) Water pump impellers, water hoses, cooling system anodes, or any component determined solely by Indmar to be damaged from the failure of any of such items.

(e) Product failure as determined solely by Indmar to be caused by neglect, lack of maintenance, accident, abnormal operation, improper installation, improper preparation, improper winterization, improper dealer set-up, improper service or normal wear and tear.

(f) Haul-out, launch, and towing charges.

(g) Cost and expense incurred that relate to the removal and/or replacement of boat partitions, seating, or material due to boat design for necessary access to the Product.

(h) Transportation charges and travel time incurred by dealer to fulfill any of its obligations pursuant to this Limited Product Warranty.

(i) Service or work to the Product as requested by the Customer that is as determined solely by Indmar to be beyond the scope of this Limited Product Warranty.

(j) Use of parts other than Indmar parts (or parts authorized by Indmar) and the use of labor other than Indmar labor (or labor authorized by Indmar) when making repairs or providing a replacement under this Limited Product Warranty.

(k) Oil, lubricants or fluids used for the normal maintenance of the Product.

(l) Defects to the Product as determined solely by Indmar to be caused by or due to participation in or preparing for racing or other competitive activity.

(m) Defects to the starter motor, armatures or field coil assembly of the Product as determined solely by Indmar to be caused by excessive cranking, condensation or submersion.

(n) Defects to the Product as determined solely by Indmar to be caused by water entering the Product via the intake or exhaust system or submersion or exposure.

(o) Defects to the Product as determined solely by Indmar to be caused by the use of fuels and lubricants that are not suitable for use with or on the Product or its fuel system components that was damaged or rendered inoperable from stale gasoline.

(p) Defects to the Product as determined solely by Indmar to be caused by the lack of cooling water resulting from the motor being started out of water or foreign materials blocking intake passages.

(q) Defects to the Product as determined solely by Indmar to be caused by servicing errors made by the Customer or by any servicing dealer/mechanic not approved or authorized by Indmar.

(r) Product warranty claims that Indmar in its sole opinion determines are not due or traceable to material defects in material or workmanship of the Product.

5. **Inspection and Testing of Product.** Certain parts of the Product may be tested upon receipt by Indmar. Such parts found to be free of defects will be returned to the dealer and no credit will be issued. Indmar reserves the right to retrieve run time/run condition data from a Product's Electric Control Module prior to granting any warranty coverage on the Product under this Limited Product Warranty.

6. **Warranty Period.** Warranty coverage shall be provided only for the periods of time hereinafter set forth:

(a) For Product installed in boats manufactured by a manufacturer approved by Indmar (OEM):

Standard Models:

(i) A period of thirty-six (36) months commencing from the date of purchase, in the case of non-commercial use;

(ii) A period of thirty-six (36) months commencing from the lease date if the lease is for private use and is for a time period of not less than two (2) years; or

(iii) A period of twelve (12) months commencing from the date of purchase or lease inception or 240 hours of Product use, whichever sooner occurs, in the case of commercial use.

Premium Models:

(iv) A period of sixty (60) months commencing from the date of purchase, in the case of non-commercial use;

(v) A period of sixty (60) months commencing from the lease date if the lease is for private use and is for a time period of not less than two (2) years; or

(vi) A period of twelve (12) months commencing from the date of purchase or lease inception or 240 hours of Product use, whichever sooner occurs, in the case of commercial use.

© 2015 Indmar Marine Engines

(b) For repowers (defined as engines purchased for replacement) or the installation of the Product in boats by a manufacturer not approved or authorized by Indmar:

(i) A period of twelve (12) months commencing from the date of purchase or 240 hours of Product use, whichever sooner occurs, in the case of non-commercial use; or

(ii) A period of twelve (12) months commencing from the date of purchase or 240 hours of Product use, whichever sooner occurs, in the case of commercial use.

In the event that more than one warranty time period may be applicable to a particular Product pursuant to this Section 6, the shortest period of time shall apply and shall be the only warranty time period allowed for that Product.

The repair or replacement of parts or the performance of service under this Limited Product Warranty does not extend the applicable period of this warranty beyond its original expiration date as set forth herein.

7. **Procedure.** Within 10 days from the date of purchase by the original retail purchaser of the Product or the beginning date of lease period, the Selling Dealer shall register the Product online by visiting the **Indmar Dealer Portal, http://dealers.indmar.com**. In addition to other requirements set forth herein, no warranty claim will be honored without the successful online registration of the Product. In the case of a leased boat, a copy of the lease contract showing the length of the lease must be delivered to Indmar. In the case of a warranty transfer to a subsequent owner or lessor, the new owner/lessor's information along with the appropriate payment must be sent to Indmar by an authorized Indmar dealer within 10 days of the transfer. No transfer shall be effective or valid unless and until approved by Indmar in its sole discretion. In the case of a warranty transfer relating to a leased boat, a copy of the lease contract showing the length of the lease must also be submitted to Indmar by an authorized Indmar dealer along with the appropriate payment. For warranty claims to be asserted hereunder, the Product or defective part thereof, together with a written notice of itemized defects must be returned to the retailer from whom the Product was purchased or to any other convenient Indmar authorized dealer. To obtain the location of an authorized Indmar dealer or service center in your area, visit the dealer locator at **www.indmar.com**. In the event that the local authorized Indmar dealer is unable to remedy a warranted defect in the Product, the Product or defective part thereof, together with a written notice of itemized defects, must be delivered to Indmar at 5400 Old Millington Road, Millington, Tennessee 38053 with any and all freight and insurance charges prepaid. All insurance and freight charges and return charges incurred by Indmar for delivery of the Product (or its new or rebuilt replacement) to the retail purchaser or lessor shall be paid by such purchaser or lessor. The Customer shall be solely responsible for any and all labor expenses related to the repair or replacement of a Product pursuant to this Limited Product Warranty that exceed the specified services rates of Indmar in effect at the date of purchase or lease. A schedule of service rates of Indmar may be obtained from any authorized Indmar dealer.

8. **Trade Accessories.** Indmar makes no warranty of any character with respect to any and all trade accessories not manufactured by Indmar.

9. **Voiding the Warranty.** In addition to any requirement set forth in this Limited Product Warranty not being met or satisfied, this Limited Product Warranty shall become void and shall not apply under the following conditions or circumstances:

(a) When the Product or any part thereof is subject to accident, alternation, modifications, abuse, misuse, neglect or improper maintenance and Indmar in its sole discretion determines the same;

(b) When the Product is serviced by any individual or entity not authorized or approved by Indmar; or

(c) When damage to the Product results from cases not arising from defects in material and/or workmanship and Indmar in its sole discretion determines the same.

10. **Notices.** Any notice to Indmar set forth pursuant to this Limited Product Warranty shall be delivered to the following address:

Indmar Products Co., Inc.
5400 Old Millington Road
Millington, Tennessee 38053

THE WARRANTY STATED ABOVE IS A LIMITED WARRANTY AND IT IS THE ONLY WARRANTY MADE BY INDMAR. INDMAR DOES NOT MAKE ANY OTHER WARRANTIES EXPRESS OR IMPLIED. THERE ARE EXPRESSLY EXCLUDED ALL WARRANTIES OF MERCHANTABILITY AND FITNESS FOR A PARTICULAR PURPOSE. INDMAR SHALL HAVE NO LIABILITY WITH RESPECT TO ITS OBLIGATIONS UNDER THIS LIMITED WARRANTY OR OTHERWISE FOR CONSEQUENTIAL, EXEMPLARY, INCIDENTAL OR PUNITIVE DAMAGES EVEN IF IT HAS BEEN ADVISED OF THE POSSIBILITY OF SUCH DAMAGES. THE STATED EXPRESS LIMITED WARRANTY IS IN LIEU OF ALL LIABILITIES OR OBLIGATIONS OF INDMAR FOR DAMAGES ARISING OUT OF OR IN CONNECTION WITH THE DEVELOPMENT, DELIVERY, USE OR PERFORMANCE OF THE PRODUCT. IN ANY EVENT, THE LIABILITY OF INDMAR FOR ANY REASON AND UPON ANY CAUSE OF ACTION WHATSOEVER SHALL BE LIMITED TO THE AMOUNT THEN PREVIOUSLY PAID FOR THE PRODUCT BY THE CUSTOMER.

INDMAR DOES NOT AUTHORIZE ANY PERSON, EMPLOYEE, AGENT, REPRESENTATIVE OR ENTITY TO ALTER ANY OF THE TERMS AND CONDITIONS OF THIS LIMITED PRODUCT WARRANTY OR CREATE ANY OTHER OBLIGATION RELATING TO THE PRODUCT. THIS WARRANTY GIVES YOU SPECIFIC LEGAL RIGHTS, AND YOU MAY ALSO HAVE OTHER RIGHTS WHICH MAY VARY FROM STATE TO STATE.

© 2015 Indmar Marine Engines

NOTICE TO CALIFORNIA CUSTOMERS: CALIFORNIA CUSTOMERS MUST DIRECTLY NOTIFY INDMAR IN WRITING IF THE PRODUCT DOES NOT CONFORM TO APPLICABLE WARRANTIES AND (A) THE NON-CONFORMITY IS LIKELY TO CAUSE DEATH OR SERIOUS BODILY INJURY AND HAS BEEN SUBJECT TO REPAIR TWO (2) OR MORE TIMES, AND/OR (B) THE NON-CONFORMITY HAS BEEN SUBJECT TO REPAIR FOUR (4) OR MORE TIMES. CALIFORNIA CUSTOMERS ARE HEREBY NOTIFIED TO THE FOLLOWING PROVISIONS OF CALIFORNIA LAW: CAL. CIVIL CODE § 1793.22 AND CAL. CIVIL CODE § 1793.2(d). COMPLETE COPIES OF THESE CODE SECTIONS ARE AVAILABLE UPON REQUEST.

INTERNATIONAL WARRANTY EXCLUSIONS

In addition to the limited warranty statement, the following limitations apply to products sold outside of the United States and Canada.

Indmar is not responsible for any Indmar Marine Engine Package:

(a) Sold through an unauthorized dealer or OEM

(b) Installed by an unauthorized dealer or OEM

(c) Imported into the country by an individual or unauthorized OEM or dealer

(d) That has not been properly serviced and maintained as stated in the Indmar Operator's Manual

(e) Customs charges, import duties, taxes and VAT on warranty replacement parts

INTERNATIONAL WARRANTY PROCEDURES

Indmar is excited to expand internationally with our boat builder partners and continually stands behind and supports its power packages that are sold outside the United States and Canada. To provide this support, Indmar Marine engines would like to ask international customers to help us provide the best quality customer service by adhering to all responsibilities that our North American owners comply with as outlined in this warranty. This, in addition to understanding the importance of service and maintenance through an authorized Indmar dealer or OEM, will help ensure that you the owner will receive the best quality workmanship and care of your new Indmar power package.

P/N OME0902-16